HYDRO-GEAR®

FORWARD MOTION THROUGH FORWARD THINKING

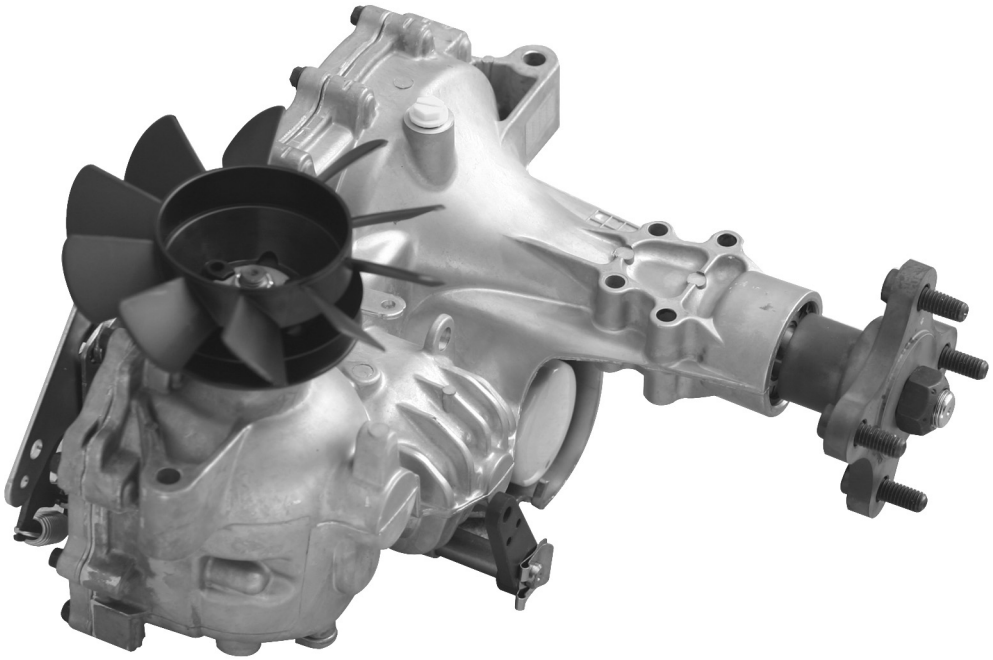

ZT-2800®
Integrated Zero-Turn Transaxle
Service and Repair Manual

BLN-52441
December 2008

Table Of Contents

Foreword 1
Description and Operation 2
Introduction 2
Hydraulic Schematic 3
External Features 4
Technical Specifications 6
Product Identification 6
Safety 7
Personal Safety 7
Tool Safety 7
Work Area Safety 7
Servicing Safety 7
Troubleshooting 8
Service and Maintenance 9
External Maintenance 9
Service and Maintenance Procedures 9
Fluids 9
Fluid Volume and Level 9
Filter and Filter Guard 10
Fluid Change Procedure 11
Purging Procedures 12
Return To Neutral Setting 13
Return To Neutral Assembly 14
Control Arm Assembly 15
Parking Brake Adjustment 16
Parking Brake Assembly 17
Brake Arm Assembly 18
Hub Removal 19
Tear Down and Reassembly 20
How To Use This Manual 20
General Instructions 20
Tools 21
Torques 21
Transaxle Removal 22
Fan and Pulley 22-24
Side Cover 25
Bull, Pinion and Reduction Gears 26
Charge Pump 27
Input Shaft 28
Bypass Arm 29
Swashplate 30
Center Section 31
Brake Assembly 32-33
Center Section Kit 34
Check Plugs & Seals 35
Cylinder Blocks 35
Axle Shaft 36
Assembly After Complete Tear Down 37
Side Cover – Screw Tightening Sequence 38
How To Use Service Schematic 39
ZT-2800® Transaxle Exploded View 40
ZT-2800® Transaxle Parts List 41
Glossary Of Terms 42-43

FOREWORD

Headquartered in Sullivan, Illinois, Hydro-Gear® is a world leader in the design, manufacture, and service of quality hydrostatic transaxles for the lawn and garden industry. The mission of our company is to be recognized by our customers and the industry as a world-class supplier and the quality leader in everything we do.

This Service and Repair Manual is designed to provide information useful in servicing and troubleshooting the Hydro-Gear ZT-2800® Integrated Zero-Turn Transaxle.

Also included is a glossary of terms that are frequently used throughout the industry and in Hydro-Gear service publications. Understanding terminology is very important!

It is necessary, and a good shop practice, that your service area be equipped with the proper tools and the mechanics be supplied the latest information available. All repair procedures illustrated in this guide are suggested, but preferred methods of repair.

Internal repair procedures require that the transaxle unit be removed from the vehicle.

This is not a certification, test or study guide for a certification test. If a technician is interested in certification, they should contact an agent representing EETC (Equipment & Engine Training Council) at (262) 367-6700 or their Hydro-Gear Central Service Distributor. Many distributors will be hosting certification testing. These study guides will cover most of the products and manufacturers in our industry.

For more information about Hydro-Gear or our products, please contact your Central Service Distributor, or call our Customer Service Department at (217) 728-2581.

DESCRIPTION AND OPERATION

Introduction

The purpose of this manual is to provide information useful in servicing the Hydro-Gear® ZT-2800® Integrated Zero-Turn Transaxle. This manual includes the ZT-2800's general descriptions, hydraulic schematics, technical specifications, servicing and troubleshooting procedures.

Other than recommended oil and filter changes, the transaxle normally will not require servicing during the life of the vehicle in which it is installed. Should other servicing be required, the exterior of the transaxle will need to be thoroughly cleaned before beginning most procedures. Do not wash the transaxle while it is hot. **Do not use a pressure washer to clean the unit.**

General Description

The ZT-2800 is a self contained unit designed for the transfer and control of power. It provides an infinitely variable speed range between zero and maximum in both forward and reverse modes of operation.

This transaxle uses a variable displacement pump with a maximum displacement of 10cc per revolution, and motor with a fixed displacement of 16cc per revolution. The variable displacement pump features a trunnion mounted swashplate with a direct-proportional displacement control. Reversing the direction of the swashplate reverses the flow of oil from the pump and thus reverses the direction of the motor output rotation. The pump and motor are of the axial piston design and utilize spherical nosed pistons which are held against a thrust race by internal compression springs.

The ZT-2800 transaxle is fully flooded with oil. A common external expansion tank assures the drives' cool, quiet operation. An external filter provides ease of access for oil maintenance of the drive for the estate and entry level professional vehicles. The ZT-2800 is designed for both charged and uncharged product versions. In the uncharged consumer vehicle drive, fluid passes through the filter by interaction of the positive head on the fluid from a properly elevated expansion tank and the negative pressure created at the pump inlet during piston operation.

Hydro-Gear's patented charge configuration is used in the estate/professional version. Here, fluid is drawn from the case and through the filter and into a fixed displacement gerotor pump. Charge pump flow not used to feed the low pressure side of the system is passed over a charge relief valve and back into the transaxle case.

The check valves in the center section are used to control the make-up flow of the fluid to the low pressure side of the loop.

The ZT-2800 has an internal cog style parking brake. It is essential to fully disengage the brake prior to operation.

A cam style, block lifting bypass is utilized in the ZT-2800 to permit moving the vehicle for a short distance at a maximum of 2 m.p.h. (3.2 Km/h) without starting the engine. The brake must be disengaged prior to actuating the bypass mechanism.

WARNING

Actuating the bypass will result in the loss of hydrostatic braking capacity. The machine must be stationary on a level surface and in neutral when actuating the bypass.

HYDRAULIC SCHEMATIC

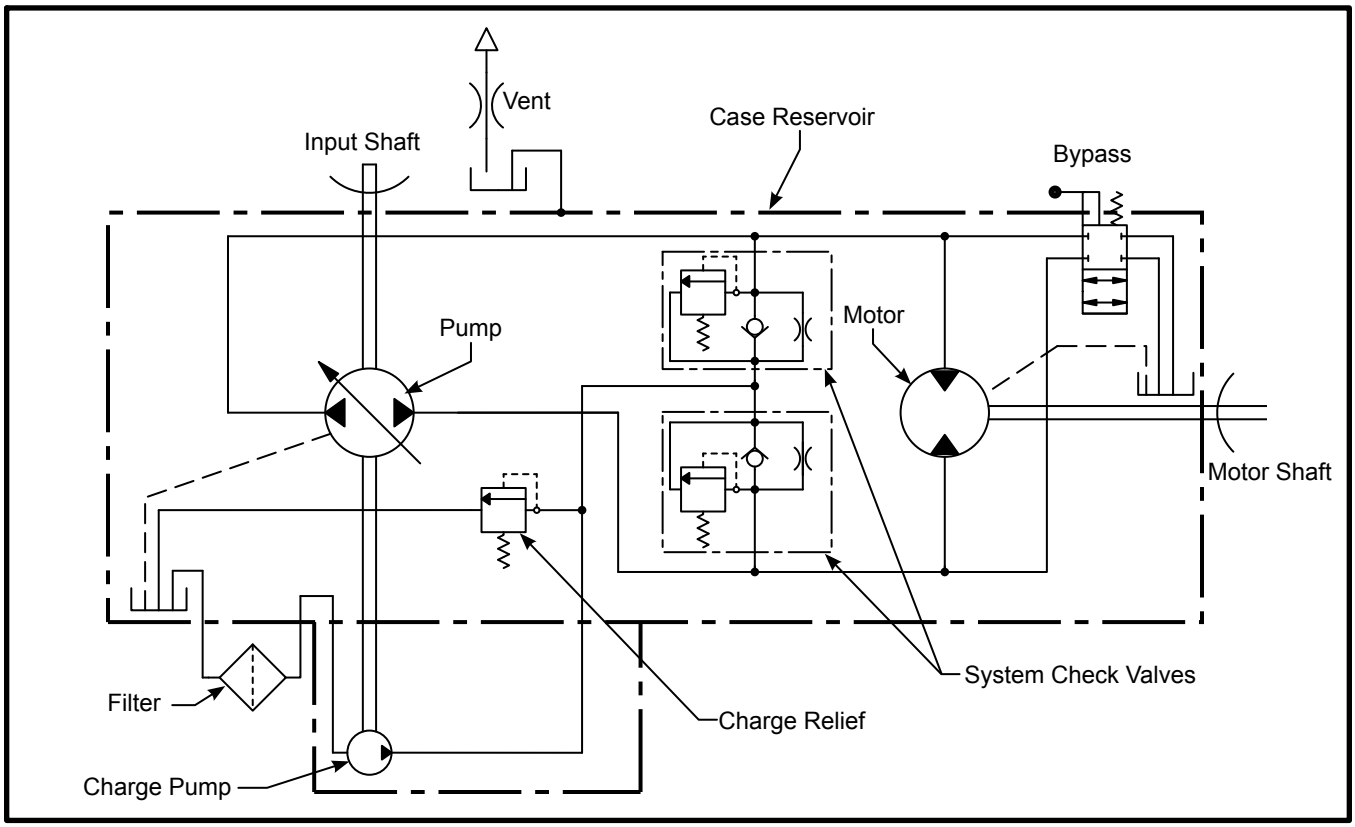

Figure 1, Hydraulic Schematic With Charge Pump

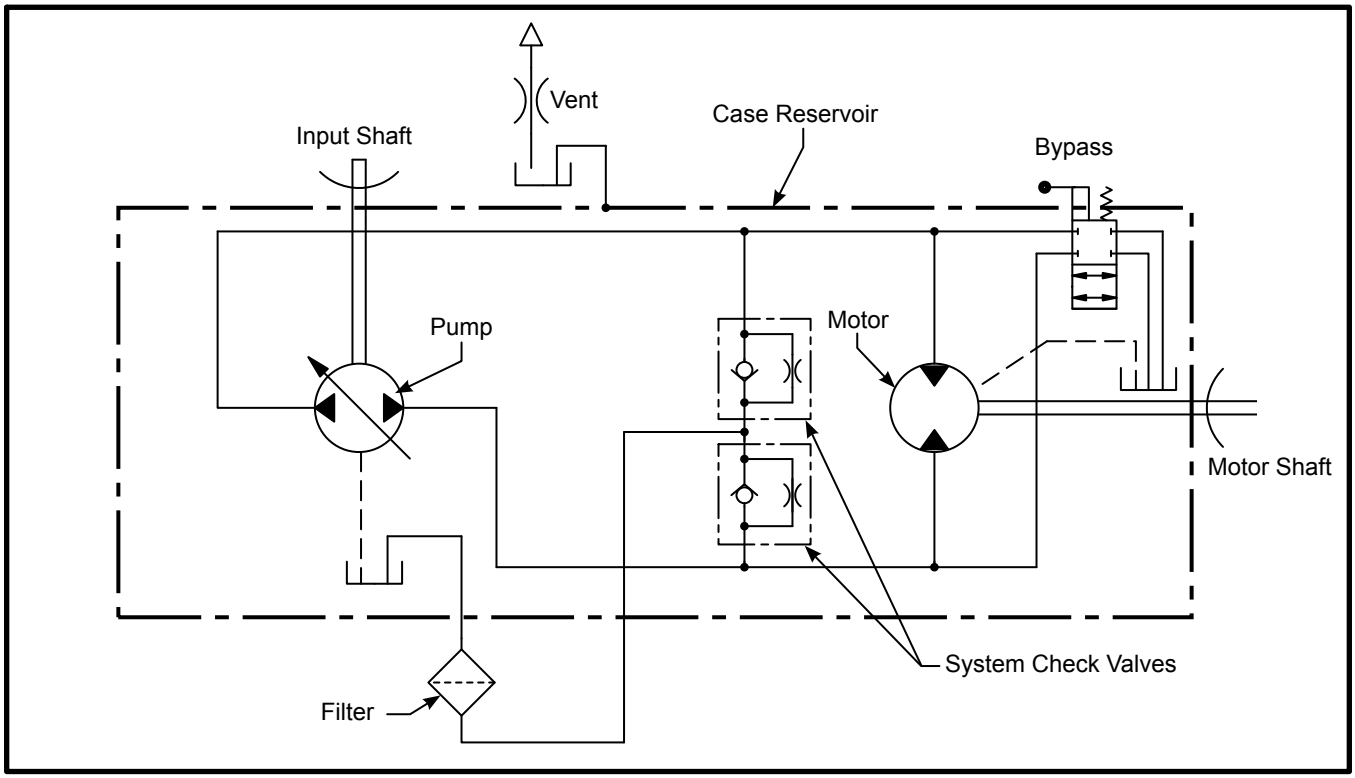

Figure 2, Hydraulic Schematic Without Charge Pump

EXTERNAL FEATURES ZT-2800®

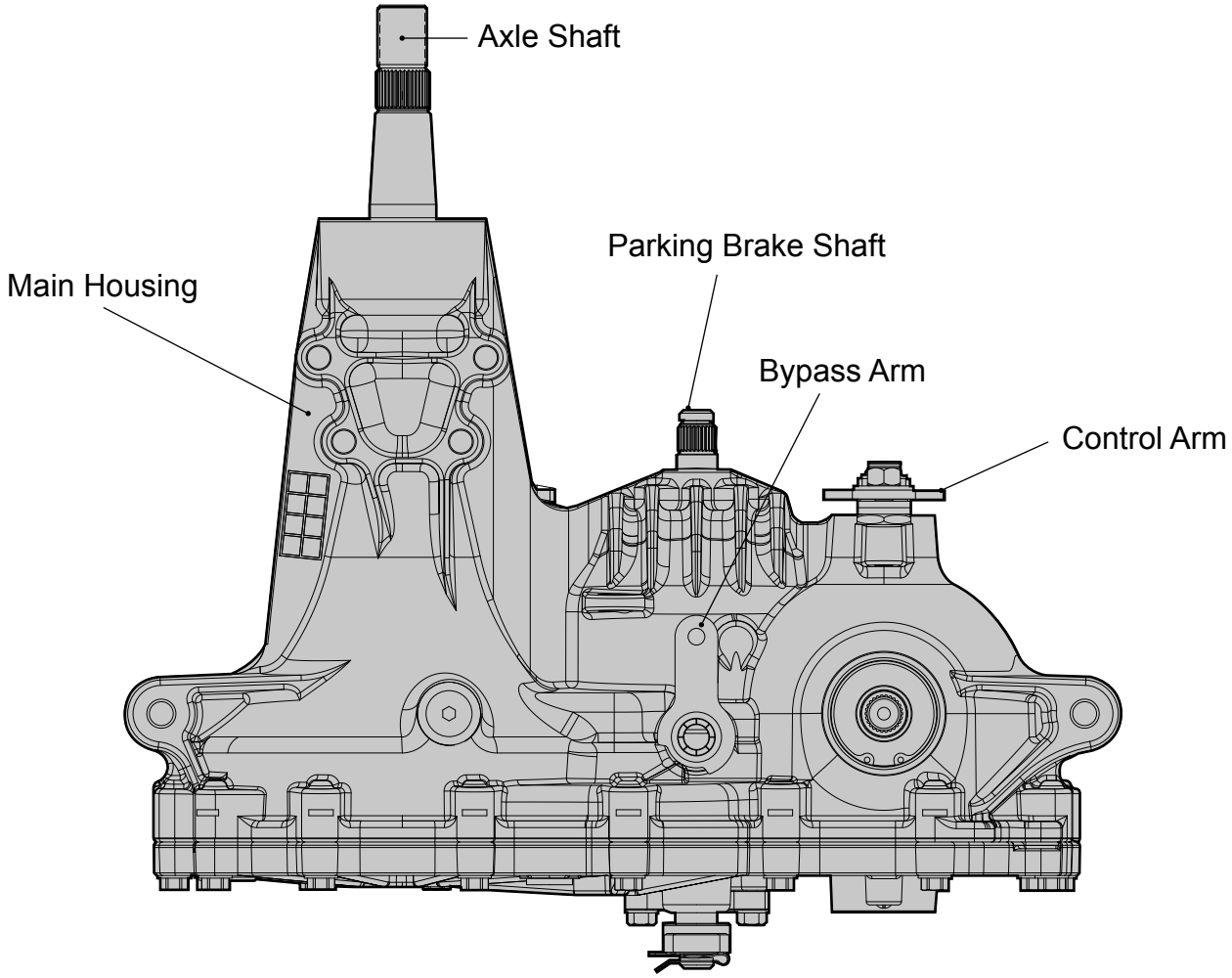

— Top View —

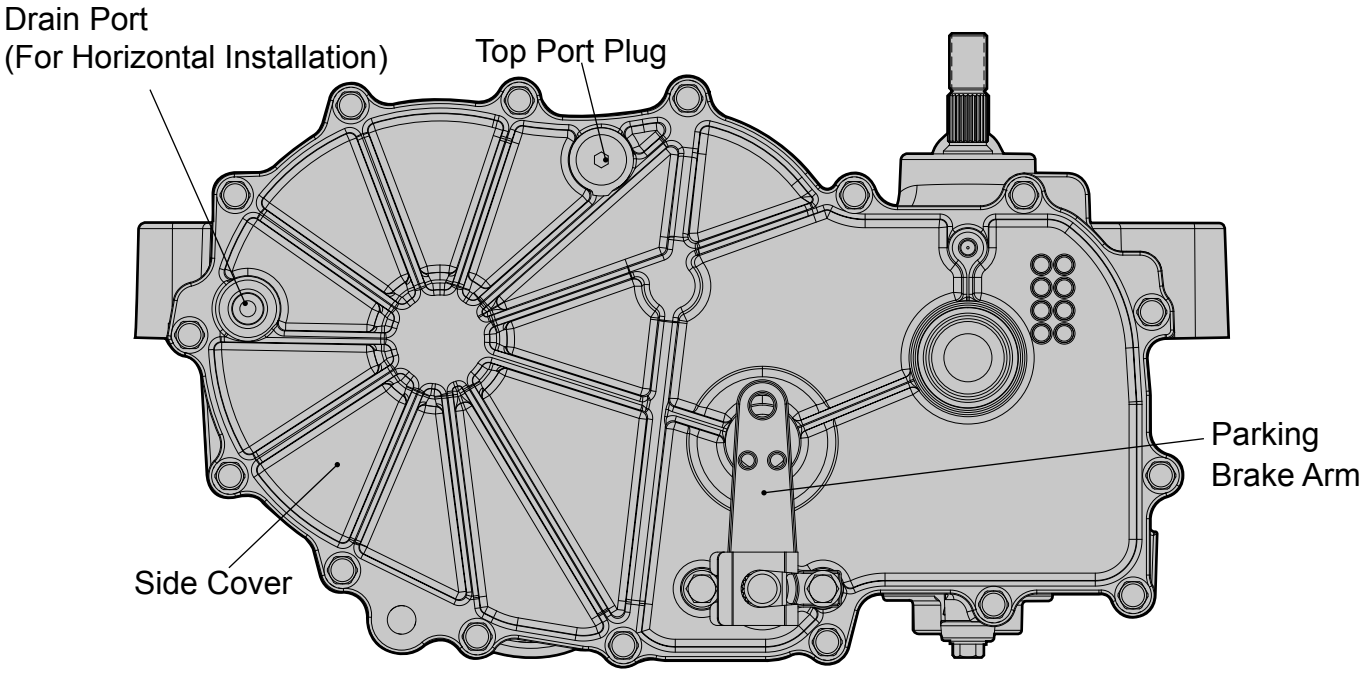

— Inboard View —

EXTERNAL FEATURES ZT-2800®

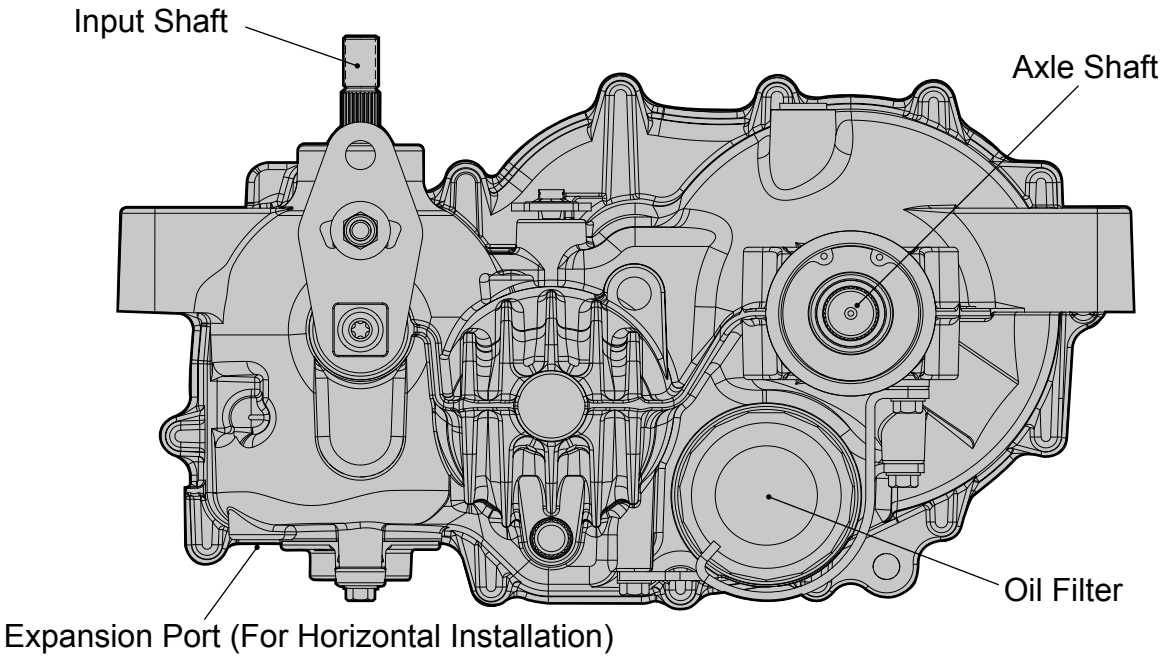

— Outboard View—Left (Standard Control) —

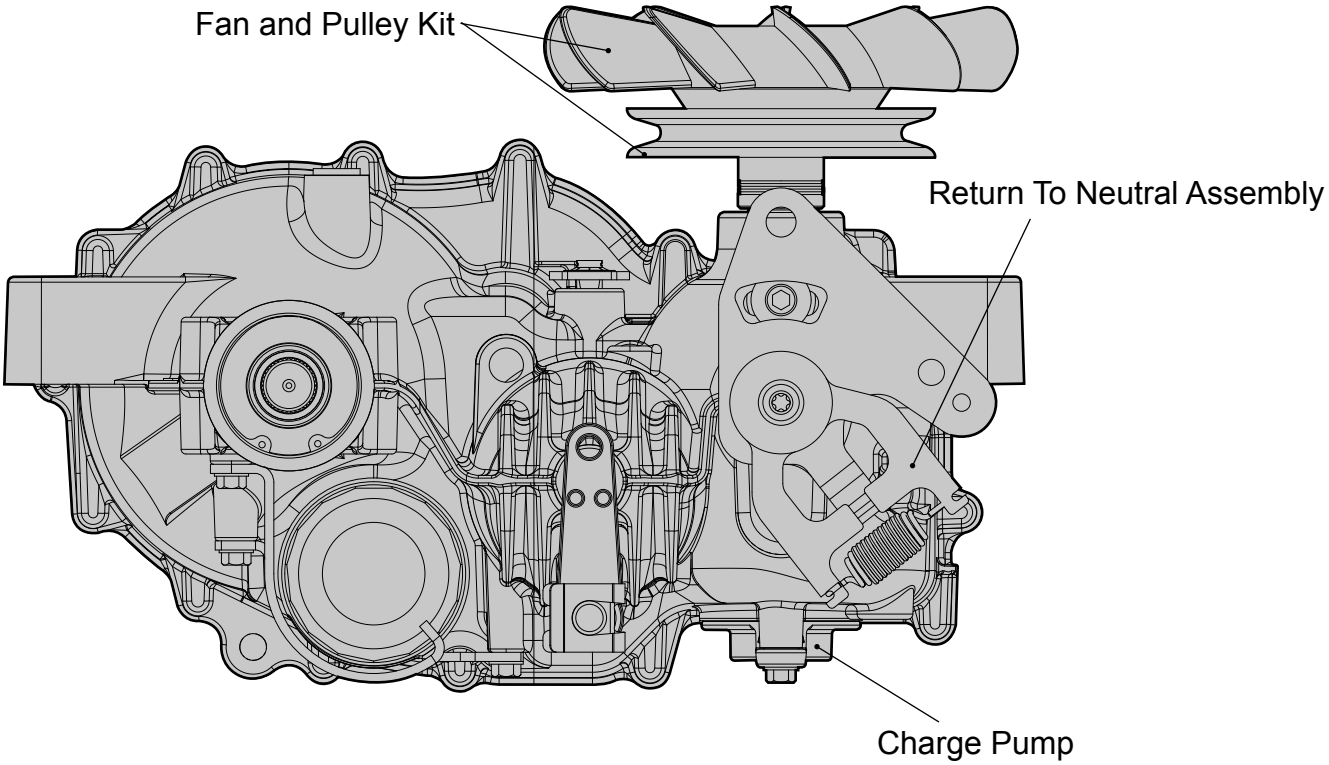

— Outboard View—Right (Return To Neutral Control) —

TECHNICAL SPECIFICATIONS

ZT-2800® TECHNICAL SPECIFICATIONS			
Overall Transaxle Reduction	20.69:1	24.74:1	27.23:1
Input Speeds			
Maximum Hi-Idle (No Load)	3000 rpm Non-Charge — 3600 rpm Charged		
Minimum	1800 rpm		
Output Torque			
Intermittent	300 lb-ft (406 N-m)	340 lb-ft (461 N-m)	370 lb-ft (502 N-m)
Continuous	160 lb-ft (217 N-m)	180 lb-ft (244 N-m)	200 lb-ft (270 N-m)
Weight on Tires (per unit)			
Maximum with 18” tires	400 lb (181 kg)	480 lb (217 kg)	540 lb (244 kg)
Maximum with 20” tires	360 lb (163 kg)	440 lb (199 kg)	480 lb (217 kg)
Maximum with 22” tires	—	400 lb (181 kg)	440 lb (199 kg)
Axle Shaft Diameter	1.00 in (25.4 mm)		
Axle Shaft End Options	Tapered 4–Bolt Flange		
Parking Brake Type	Internal		
Weight of Unit	32 lb (14.5 kg)		

PRODUCT IDENTIFICATION

The model and configuration of the ZT-2800 can be determined from the label shown below.

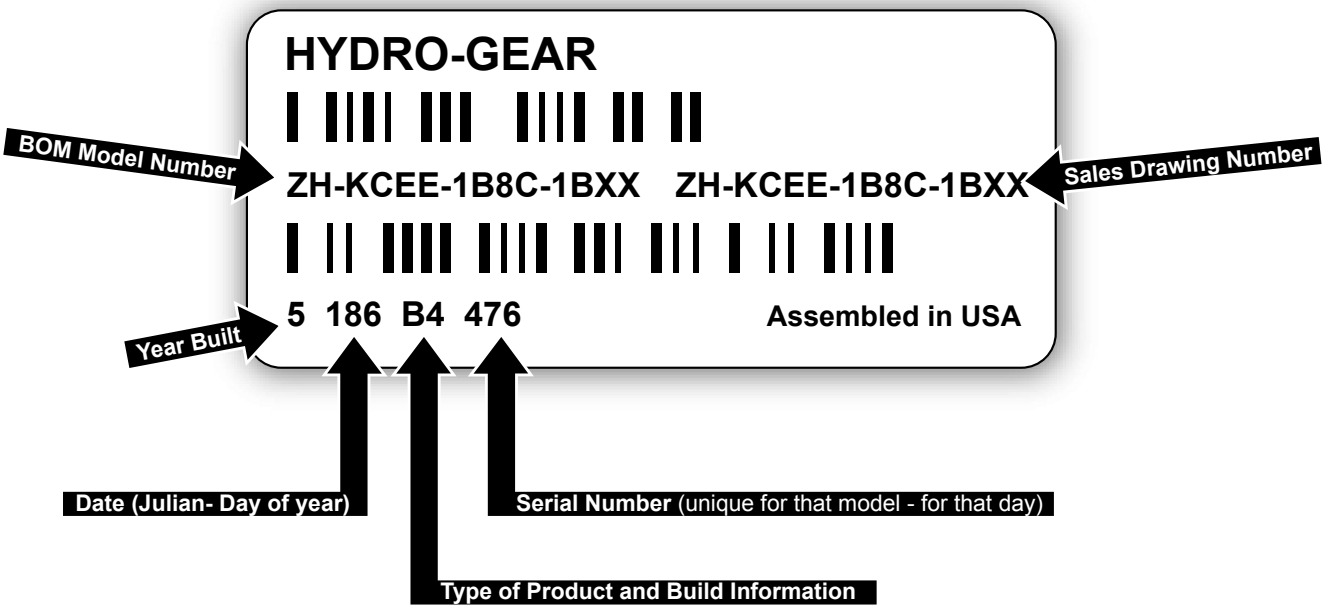

Figure 3, Configuration Label

SAFETY

This symbol points out important safety instructions which, if not followed, could endanger the personal safety and/or property of yourself and others. Read and follow all instructions in this manual before attempting maintenance on your transaxle. When you see this symbol - **HEED ITS WARNING.**

WARNING

POTENTIAL FOR SERIOUS INJURY

Inattention to proper safety, operation, or maintenance procedures could result in personal injury, or damage to the equipment. Before servicing or repairing the ZT-2800® transaxle, fully read and understand the safety precautions described in this section.

Personal Safety

Certain safety precautions must be observed while servicing or repairing the ZT-2800. This section addresses some of these precautions but must not be considered an all-inclusive source on safety information. This section is to be used in conjunction with all other safety material which may apply, such as:

1. Other manuals pertaining to this machine,
2. Local and shop safety rules and codes,
3. Governmental safety laws and regulations.

Be sure that you know and understand the equipment and the hazards associated with it. Do not place speed above safety.

Notify your supervisor whenever you feel there is any hazard involving the equipment or the performance of your job.

Never allow untrained or unauthorized personnel to service or repair the equipment.

Wear appropriate clothing. Loose or hanging clothing or jewelry can be hazardous. Use the appropriate safety equipment, such as eye and hearing protection, and safety-toe and slip-proof shoes.

Never use compressed air to clean debris from yourself or your clothing.

Tool Safety

Use the proper tools and equipment for the task.

Inspect each tool before use and replace any tool that may be damaged or defective.

Work Area Safety

Keep the work area neat and orderly. Be sure it is well lit, that extra tools are put away, trash and refuse are in the proper containers, and dirt or debris have been removed from the working areas of the machine.

The floor should be clean and dry, and all extension cords or similar trip hazards should be removed.

Servicing Safety

Certain procedures may require the vehicle to be disabled in order to prevent possible injury to the servicing technician and/or bystanders.

The loss of hydrostatic drive line power may result in the loss of hydrostatic braking capability.

Some cleaning solvents are flammable. Use only approved cleaning materials: Do not use explosive or flammable liquids to clean the equipment.

To avoid possible fire, do not use cleaning solvents in an area where a source of ignition may be present.

Discard used cleaning material in the appropriate containers.

TROUBLESHOOTING

WARNING

Do not attempt any servicing or adjustments with the engine running. Use extreme caution while inspecting the drive belt assembly and all vehicle linkage!

Follow all safety procedures outlined in the vehicle owner's manual.

In many cases, problems with the ZT-2800® are not related to a defective transaxle, but are caused by slipping drive belts, partially engaged bypass valves, and loose or damaged control linkages. Be sure to perform all operational checks and adjustments outlined in Service and Maintenance, before assuming the transaxle is malfunctioning. The table below provides a troubleshooting checklist to help determine the cause of operational problems.

TROUBLESHOOTING CHECKLIST	
Possible Cause	**Corrective Action**
Unit Operates In One Direction Only	
Control linkage bent or out of adjustment	Repair or replace linkage, Page 9
Drive belt slipping or pulley damaged	Repair or replace drive belt or pulley, Page 9
Vehicle Does Not Drive/Track Straight	
Vehicle tires improperly inflated	Refer to vehicle manufacturer suggested pressure
Control linkage bent or out of adjustment	Repair or replace linkage, Pages 9 and 13
Bypass assembly sticking	Repair or replace bypass, Page 29
Brake Partially Engaged	Disengage Brake, Replace Broken or Missing Brake Return Spring
Unit Is Noisy	
Oil level low or contaminated oil	Fill to proper level or change oil, Page 11
Excessive loading	Reduce vehicle loading, Page 9
Loose parts	Repair or replace loose parts
Bypass assembly sticking	Repair or replace linkage, Page 9
Air trapped in hydraulic system	Purge hydraulic system, Page 12
Brake Partially Engaged	Disengage Brake, Replace Broken or Missing Brake Return Spring
Unit Has No/Low Power	
Engine speed low	Adjust to correct setting
Control linkage bent or out of adjustment	Repair or replace linkage, Page 9
Drive belt slipping or pulley damaged	Repair or replace drive belt or pulley, Page 9
Oil level low or contaminated oil	Fill to proper level or change oil, Page 11
Excessive loading	Reduce vehicle loading, Page 9
Bypass assembly sticking	Repair or replace linkage, Page 9
Air trapped in hydraulic system	Purge hydraulic system, Page 12
Brake Partially Engaged	Disengage Brake, Replace Broken or Missing Brake Return Spring
Unit Is Operating Hot	
Debris buildup around transaxle	Clean off debris, Page 20
Cooling fan damaged	Repair or replace cooling fan, Pages 22-24
Oil level low or contaminated oil	Fill to proper level or change oil, Page 11
Excessive loading	Reduce vehicle loading, Page 9
Air trapped in hydraulic system	Purge hydraulic system, Page 12
Brake Partially Engaged	Disengage Brake, Replace Broken or Missing Brake Return Spring
Transaxle Leaks Oil	
Damaged seals, housing, or gaskets	Replace damaged components
Air trapped in hydraulic system	Purge hydraulic system, Page 12

SERVICE AND MAINTENANCE

External Maintenance

Regular external maintenance of the ZT-2800® should include the following:

1. Check the vehicle operator's manual for the recommended load ratings. Insure that the current application does not exceed load rating.
2. Check oil level in accordance with "Fluid Change Procedure," step 12. Refer to page 11.
3. Inspect the vehicle drive belt, idler pulley(s), and idler spring(s). Insure that no belt slippage can occur. Slippage can cause low input speed to the transaxle.
4. Inspect the vehicle control linkage to the directional control arm on the transaxle. Also insure that the control arm is securely fastened to the trunnion arm of the transaxle.
5. Inspect the bypass mechanism on the transaxle and the vehicle linkage to insure that both actuate and release fully.

Service and Maintenance Procedures

Some of the service procedures presented on the following pages can be performed while the ZT-2800 is mounted on the vehicle. Any repair procedures as mentioned in the repair section of this manual must be performed after the unit has been removed from the vehicle.

Fluids

The fluids used in Hydro-Gear products have been carefully selected, and only equivalent, or better products should be substituted.

Typically, an engine oil with a minimum rating of 9.0 cSt (55 SUS) at 230° F (110° C) and an API classification of SL is recommended. A 20W50 engine oil has been selected for use by the factory and is recommended for normal operating procedures.

Fluid Volume and Level

Fluid volume information is provided in the table below. Total system volume will depend on expansion tank size, hose length and transaxle volume.

Certain situations may require additional fluid to be added or even replaced. Refer to page 10 and figure 5 for the proper fill port location.

Recheck the fluid level once the unit has been operated for approximately 1 minute.

Purging will be required if oil has been changed. Refer to the purging procedures on page 12.

Fluid Description	
20W50 engine oil	
Component	**Volume**
Transaxle (bottom of fill port)	2284 ml (77.23 fl. oz.)
Expansion Tank (cold fill line)	40-82 ml (1.35-2.77 fl. oz.)
Hose (0.5″ I.D.)	38.60 ml (1.31 fl. oz.) / ft.

FILTER AND FILTER GUARD

Refer to Figure 4

Disassembly

1. Remove the hex head screws (105), and filter guard (106).
2. Remove the filter (23) and discard.

NOTE: *Always replace the filter when performing any internal maintenance to the transaxle.*

3. Remove the metal oil drain plug (5) or the fitting (111) from inlet port and allow any remaining oil to drain from the transaxle.

Inspection

1. Inspect all parts for excessive wear or damage. Replace if necessary.

Assembly

1. Reassemble all parts in the reverse order of disassembly.
2. When tightening the fasteners, refer to the table on page 21 for the required torque values.
3. Fill transaxle with oil. Refer to “Fluid Change Procedures,” page 11, steps 3 and 4 for filter change instructions.

NOTE: *As a general rule, use the low end of the torque specification on fasteners when reassembling the unit.*

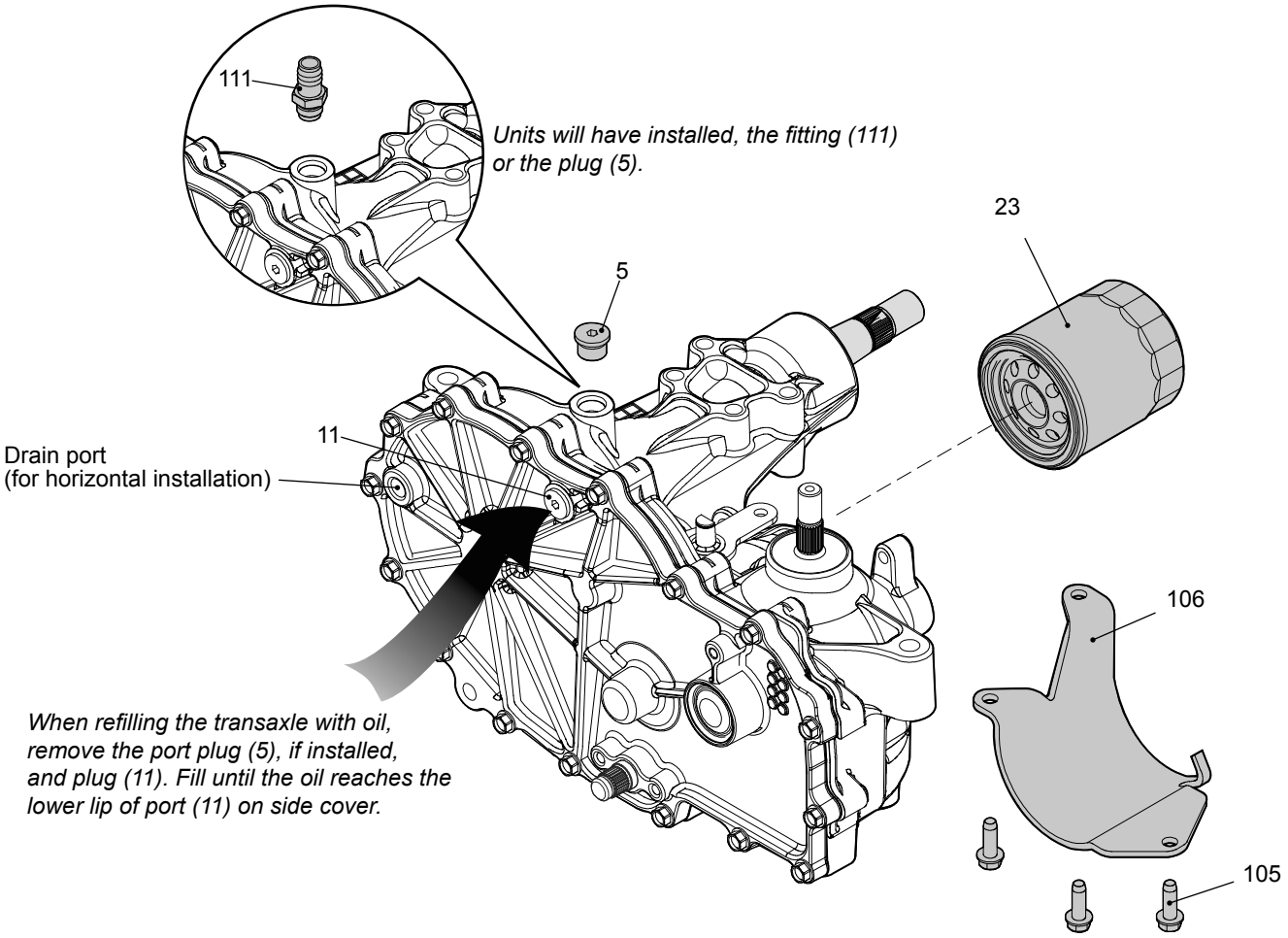

Figure 4, Filter and Guard

FLUID CHANGE PROCEDURE

This transaxle is designed with an external filter for ease of maintenance. To ensure constant fluid quality levels and longer life, an initial oil and filter change at 75-100 hours, then every 400 hours thereafter is recommended.

The following procedure can be performed with the transaxles installed in the vehicle, and the vehicle on level ground. Apply the bypass valve for each transaxle and lock the vehicle parking brake.

1. Remove the three 1/4” filter guard screws and filter guard. Clean any loose debris from around the perimeter of the filter. See figures 4 and 5.
2. Place an oil drain pan (12” or more diameter and 8 qt. capacity is optimal) beneath the oil filter. Remove the oil filter from the transaxle.
3. After the oil has drained, wipe the filter base surface off and apply a film of new oil to the gasket of the new replacement filter (Hydro-Gear part number 52114).
4. Install the new filter by hand, turn 3/4 to one full turn after the filter gasket contacts the filter base surface.
5. Re-install the filter guard with three 1/4” screws. Torque screws to 65 in. lbs. (7.3 Nm) each.
6. Repeat steps 1-5 on the opposite side transaxle drive.
7. Drain old oil filters of all free flowing oil prior to disposal. Place used oil in appropriate containers and deliver to an approved recycling collection facility.
8. Remove the top port plug (figure 6) from the left side and right side transaxles prior to filling with oil. This will allow the transaxles to vent during oil fill.
9. Remove the cap from the transaxle’s expansion tank located on the vehicle frame.
10. Fill with 20W50 motor oil until oil just appears at the bottom of each transaxle’s top port (approximately 2 qts. per transaxle, 4 qts. total). Install the top port plug into each transaxle as the oil level reaches this port.
11. Install and torque the top port plugs to 180 in. lbs. (20.3 Nm).
12. Continue to fill the transaxles through the expansion tank until the “Full Cold” line is reached on the Hydro-Gear expansion tank (refer to vehicle owner’s manual for specific volumes).
13. Re-install the expansion tank cap by hand. Be careful to not overtighten.
14. Proceed to the purge procedure.

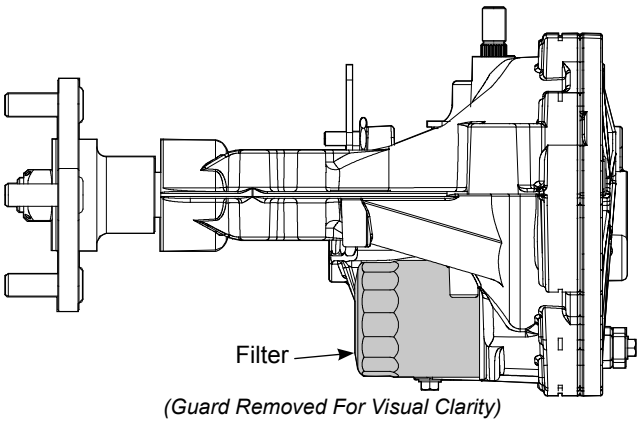

Figure 5, Filter Location

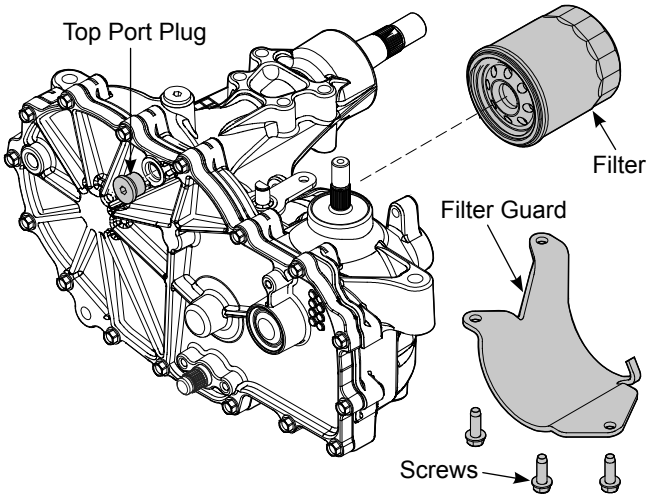

Figure 6, Filter And Filter Guard

PURGING PROCEDURES

Due to the effects air has on efficiency in hydrostatic drive applications, it is critical that it is purged from the system.

Air creates inefficiency because its compression and expansion rate is higher than that of the oil approved for use in hydrostatic drive systems.

These purge procedures should be implemented any time a hydrostatic system has been opened to facilitate maintenance or the oil has been changed.

The resulting symptoms in hydrostatic systems may be:

1. Noisy operation.
2. Lack of power or drive after short term operation.
3. High operation temperature and excessive expansion of oil.

Before starting, make sure the transaxle is at the proper oil level. If it is not, fill to the specifications outlined in this manual.

The following procedures are best performed with the vehicle drive wheels off the ground. Then repeated under normal operating conditions. If this is not possible, then the procedure should be performed in an open area free of any objects or bystanders.

1. Disengage the brake if activated.
2. With the bypass valve open and the engine running, slowly move the directional control in both forward and reverse directions (5 or 6 times).
3. With the bypass valve closed and the engine running, slowly move the directional control in both forward and reverse directions (5 to 6 times). Check the oil level, and add oil as required after stopping the engine.
4. It may be necessary to repeat Steps 2 and 3 until all the air is completely purged from the system. When the transaxle operates at normal noise levels and moves smoothly forward and reverse at normal speeds, then the transaxle is considered purged.

RETURN TO NEUTRAL SETTING

WARNING

POTENTIAL FOR SERIOUS INJURY

Inattention to proper safety, operation, or maintenance procedures could result in personal injury, or damage to the equipment. Before servicing or repairing the ZT-2800® transaxle, fully read and understand the safety precautions described in this section.

WARNING

Do not attempt any servicing or adjustments with the engine running. Use extreme caution while inspecting the drive belt assembly and all vehicle linkage!

Follow all safety procedures outlined in the vehicle owner's manual.

The return to neutral mechanism on the transaxle is designed to set the directional control into a neutral position when the operator releases the vehicle hand control. Follow the procedures below to properly adjust the return to neutral mechanism on the transaxle:

1. Confirm the transaxle is in the operating mode (bypass disengaged). Raise the vehicle's drive tires off the ground to allow free rotation.

NOTE: *It may be necessary to remove the drive tire from the axle hub to access the linkage control and the transaxle return arm. Remove the wheel by removing the lug nuts. Do not remove the axle/hub nut.*

2. Remove the Original Equipment Manufacturer's (OEM's) control linkage at the control arm.
3. Start the engine and increase the throttle to full engine speed.
4. Check for axle rotation. If the axle does not rotate, go to Step 5. If the axle rotates, go to Step 6.
5. Stop the vehicle's engine. Reattach and adjust the vehicle's linkage according to the vehicle owner's manual.
6. Note the axle directional movement. Stop the vehicle engine. Loosen the RTN adjustment screw until the control arm can be rotated. Rotate the control arm in the opposite direction of the axle rotation in 5 degree increments. Tighten the RTN adjustment screw. Recheck according to steps 3 and 4. Refer to Figure 7.

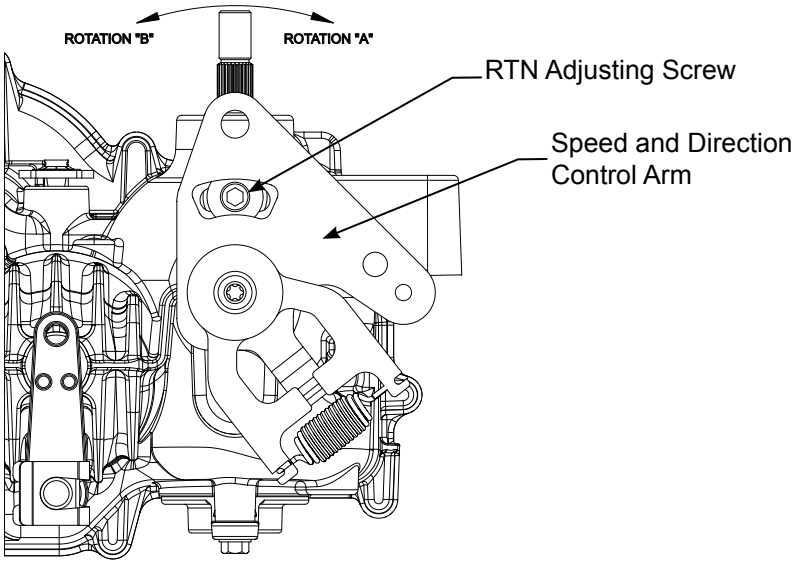

Figure 7, Return to Neutral Setting

RETURN TO NEUTRAL ASSEMBLY

Refer to Figure 8

Disassembly

1. Remove all items previously discussed in their recommended order.
2. Remove the RTN control arm kit (211) by first removing the spring (147) and Torx head screw (46). The remaining members of the assembly can be removed as a single item – washer (146), unidirectional scissor arm kit (145), and the control arm (44).
3. Remove the Allen head screw (142), washer (45), neutral arm (141) and spacer (140).

NOTE: *Only remove the seal (41) if damaged or worn. The seal is not part of the RTN control arm kit (211), and cannot be serviced separately. Refer to "Seal Kit" in the Items List on page 41.*

Inspection

1. Inspect all parts for excessive wear or damage. Replace if necessary.

Assembly

1. Reassemble all parts in the reverse order of disassembly.
2. When tightening the fasteners, refer to the table on page 21 for the required torque values.
3. Refer to the RTN adjustments on page 13.

NOTE: *As a general rule, use the low end of the torque specification on fasteners when reassembling the unit.*

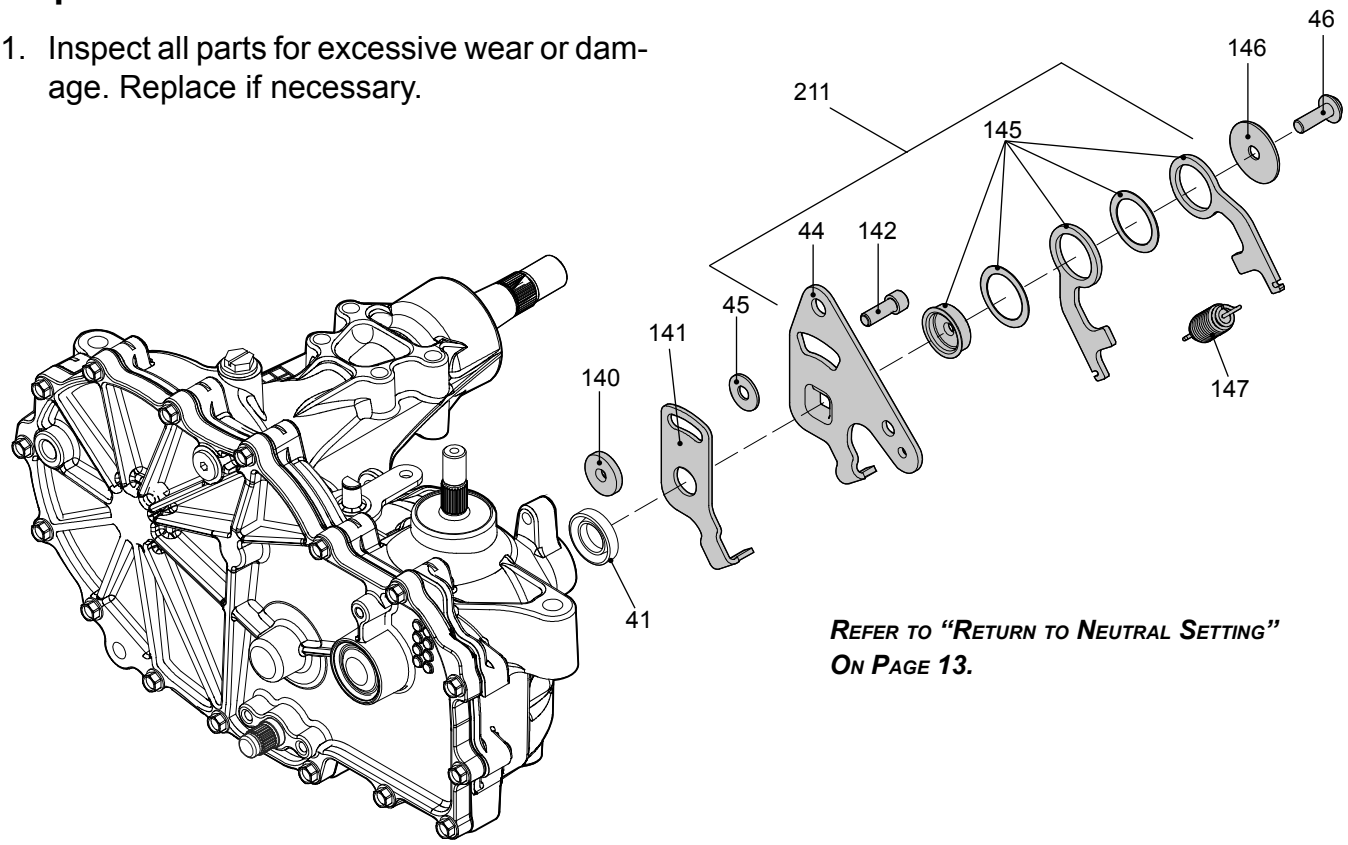

Figure 8, Return to Neutral Assembly

CONTROL ARM ASSEMBLY

Refer to Figure 9

Disassembly

1. Remove all items previously discussed in their recommended order.
2. Remove the lock nut (47), the washer (45) and the Torx head screw (46).
3. Remove the control arm (44), the washers (43) and the stud (42).

NOTE: *Only remove the seal (41) if damaged or worn. The seal cannot be serviced separately. Refer to "Seal Kit" in the Items List on page 41.*

Inspection

1. Inspect all parts for excessive wear or damage. Replace if necessary.

Assembly

1. Reassemble all parts in the reverse order of disassembly.
2. When tightening the fasteners, refer to the table on page 20 for the required torque values.

NOTE: *As a general rule, use the low end of the torque spec on fasteners when reassembling the unit.*

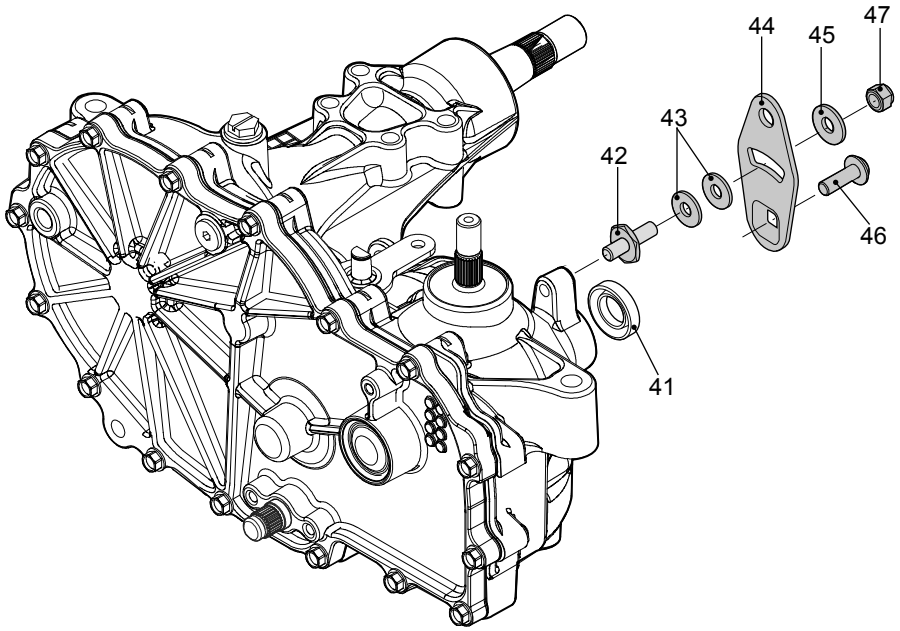

Figure 9, Control Arm Assembly

PARKING BRAKE ADJUSTMENT (Code 1 or 2)

Character #7 in the model number code = 1 or 2.

Example: ZX-XXXX-1XXX-XXXX

WARNING

POTENTIAL FOR SERIOUS INJURY

When servicing the parking brake on unlevel terrain, it is essential to chock the vehicle wheels to prevent vehicle movement.

It should not be necessary to adjust the transaxle parking brake over the life of the vehicle. In the event that the transaxle parking brake does not hold per vehicle manufacturer's specifications, the parking brake can be adjusted by rotating the handle (102).

1. Note orientation of the vehicle parking brake and linkage in the activated (locked) position.
2. Disengage the brake.
3. Detach the vehicle parking brake linkage from the parking brake handle (102).
4. While holding the parking brake handle (102) firmly onto the splines, remove clip (103) from the shaft tip.
5. Before removing the parking brake handle (102) scribe a reference mark between the handle and shaft tip (101).
6. Remove the brake handle (102) far enough to rotate the handle one tooth in the angular direction opposite the brake handle's actuated position.
7. Attach the retaining clip (103) to the brake cam shaft.
8. Connect the vehicle parking brake linkage to the brake handle (102).
9. Test the parking brake to assure it meets the vehicle manufacturer's specifications.
10. It is also important to assure that the parking brake is not partially engaged while the vehicle is in the normal drive mode. This can be confirmed by moving the vehicle to level ground, turning the engine off, disengaging the brake, engaging the bypass and assuring that the vehicle can be moved by pushing with reasonable effort.

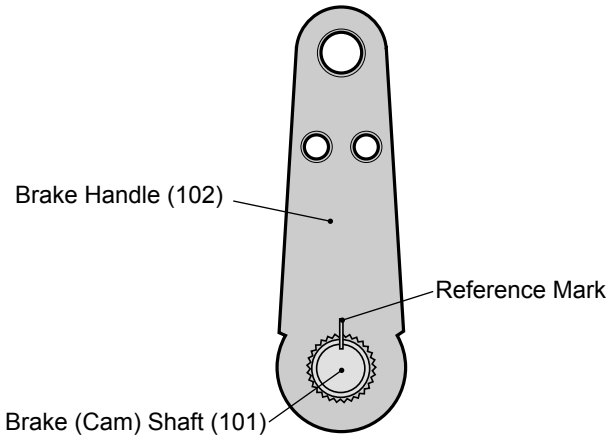

Figure 10, Brake Handle Orientation

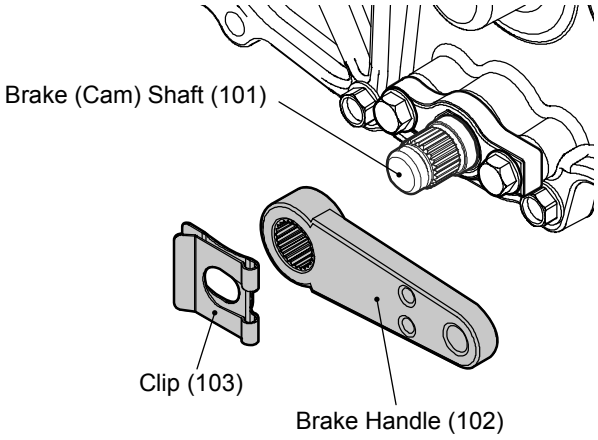

Figure 11, Brake Handle Removal

PARKING BRAKE ASSEMBLY (Code 1 or 2)

Character #7 in the model number code = 1 or 2.

Example: ZX-XXXX-1XXX-XXXX

Refer to Figure 12

Disassembly

1. Mark the position of the cam stop retainer (104) in relation to the side cover (2).

NOTE: *The orientation of the cam stop and brake-cam to one another is very important. Indicate their relationship to each other on the side cover to assist in their correct assembly. See Insert below.*

2. Remove the retaining clip (103).
3. Mark the position of the brake (cam) shaft (101) in relation to the brake handle (102).
4. Remove the brake handle (102).
5. Remove the hex head screws (105) and the cam stop retainer (104).

Inspection

1. Inspect all parts for excessive wear or damage. Replace if necessary.
2. Inspect the splines on the handle and brake cam shaft.

Assembly

1. Reassemble all parts in the reverse order of disassembly.
2. When tightening the fasteners, refer to the table on page 21 for the required torque values.

NOTE: *As a general rule, use the low end of the torque specification on fasteners when reassembling the unit.*

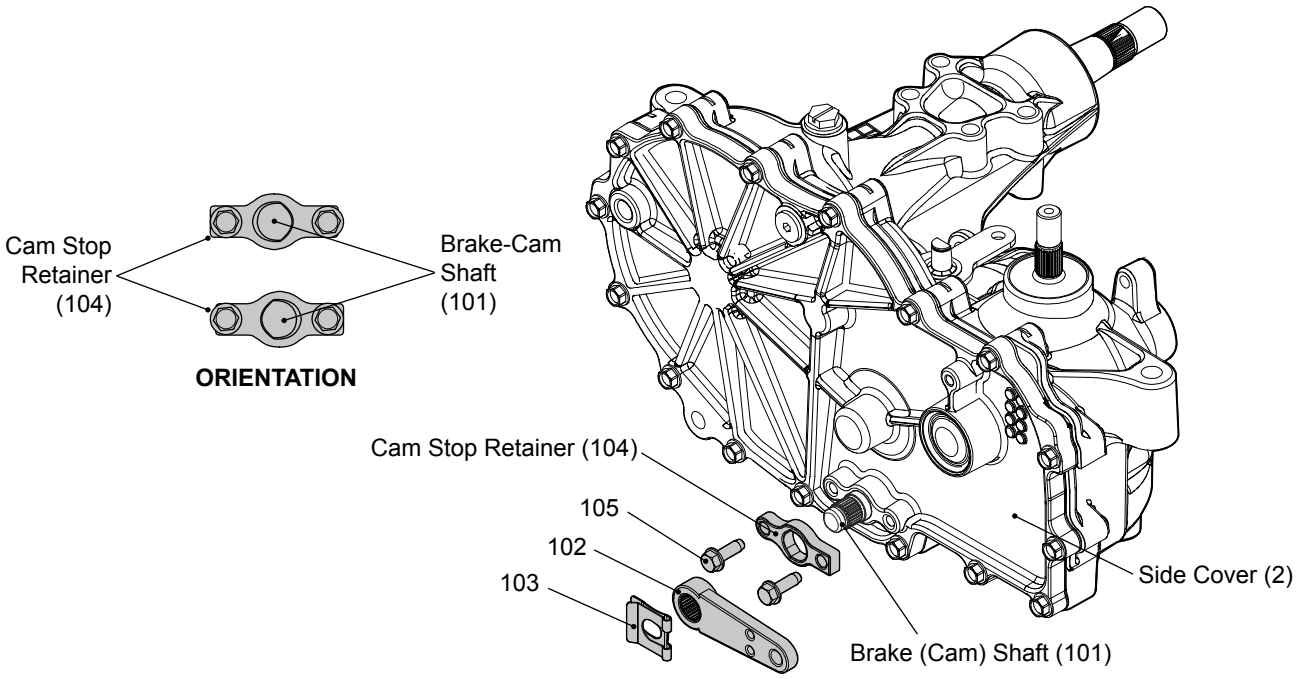

Figure 12, Parking Brake

BRAKE ARM ASSEMBLY (Code 3)

Character #7 in the model number code = 3

Example: ZX-XXXX-3XXX-XXXX

Refer to Figure 13

Disassembly

1. Mark the position of the brake arm (102) in relation to the brake shaft (101).

NOTE: *The orientation of the brake arm and brake shaft to one another is very important.*

2. Remove the retaining clip (103).
3. Remove the brake arm (102).

Inspection

1. Inspect all parts for excessive wear or damage. Replace if necessary.
2. Inspect the splines on the brake arm and brake shaft.

Assembly

1. Reassemble all parts in the reverse order of disassembly.

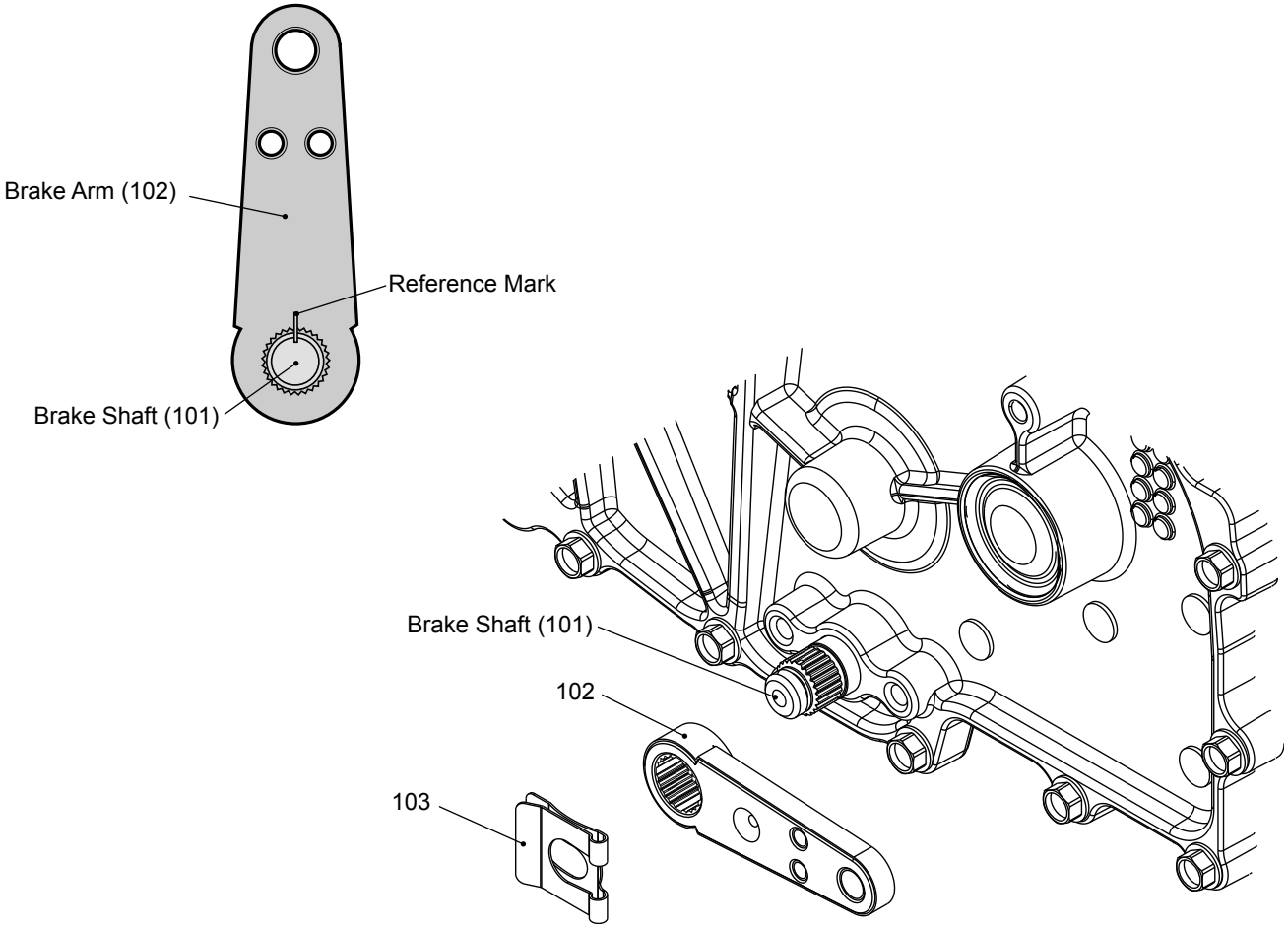

Figure 13, Parking Brake

HUB REMOVAL

Do not use this procedure to remove the drive wheel from the transaxle. Remove the drive wheel by removing the lug nuts.

DESCRIPTION: Follow the directions below for removal of 4 bolt flanged hubs from tapered axle shafts to facilitate maintenance to bearings, bushings and seals externally.

WARNING

POTENTIAL FOR SERIOUS INJURY

Inattention to proper safety, operation, or maintenance procedures could result in personal injury, or damage to the equipment. Before servicing or repairing the transaxle, fully read and understand the safety precautions described in the transaxle Service and Repair manual that pertains to the specific transaxle to be repaired.

Note: *Before using the Hub Removal Tool (Hydro - Gear P/N 71241), apply a thin coat of anti-seize to the bolt threads. Thread the bolt in and out of the Hub Puller prior to using it for the first time.*

1. With the vehicle engine placed in the “OFF” position, chock the front wheels, engage the parking brake. Raise the vehicle drive tires off the ground and remove the lug nuts from the vehicles’ drive wheel/hub studs.
2. Remove the hex retaining nut (3/4-16) from the center of the axle hub.
3. Back out the hub removal tool bolt with a 1-1/8” socket before installing the hub removal tool to the axle hub.
4. Insert the hub removal tool over the flange wheel hub studs. Install lug nuts and secure evenly. Torque to 100 lb-in. (11.3 Nm).
5. Tighten the 1-1/8” socket head center bolt evenly and slowly. Note: This pressure will separate the hub from the tapered axle.
6. Remove the lug nuts and separate the hub removal tool from the flanged hub and discard the “old” flanged hub and replace with a new flanged hub.
7. Refer to the appropriate manual / schematics for parts, repair procedures and proper torque during reassembly of the flanged hub to the tapered axle.
8. Install wheel and rim and torque lug nuts. Reference applicable vehicle service manual for proper lug nut torque.
9. Lower the vehicle to the ground, remove chocks. Note: Brake will still be in engaged mode.

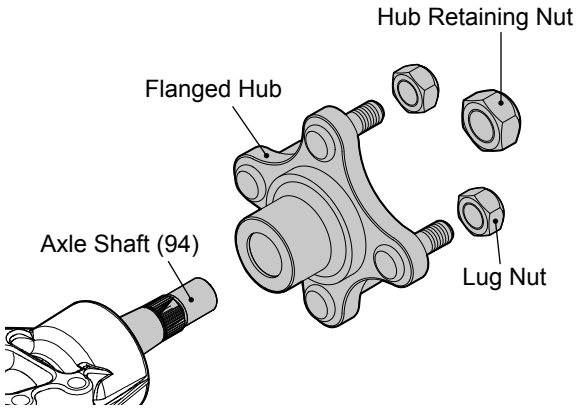

Figure 14, Hub Assembly

TEAR DOWN AND REASSEMBLY

How to Use This Manual

Each subassembly illustrated in this manual is illustrated with an exploded view showing the parts involved. The **item reference numbers in each illustration are for assembly instructions only.** See page 41 for part names and descriptions. A complete exploded view and item list of the transaxle is provided at the end of the repair section.

General Instructions

Cleanliness is a primary means of assuring satisfactory life on repaired units. Thoroughly clean all exposed surfaces prior to any type of maintenance. Cleaning of all parts by using a solvent wash and air drying is usually adequate. As with any precision equipment, all parts must be kept free of foreign material and chemicals.

Protect all exposed sealing surfaces and open cavities from damage and foreign material. The external surfaces should be cleaned before beginning any repairs. **Do not use a pressure washer to clean the transaxle.**

Upon removal, it is recommended that all seals, O-rings, and gaskets be replaced. During installation lightly lubricate all seals, O-rings and gaskets with a clean petroleum jelly prior to assembly. Also protect the inner diameter of seals during installation by covering the shaft with a cellophane or plastic wrap material. Be sure all remnants of this covering are removed after servicing.

Parts requiring replacement must be replaced from the appropriate kits identified in the Items Listing, found at the end of this manual. Use only original Hydro-Gear replacement parts found in BLN-51427 (CD).

IMPORTANT: When internal repair is performed on the ZT-2800® transaxle, the oil filter must be replaced.

TOOLS

REQUIRED TOOLS	
Miscellaneous	**Sockets**
Hub Puller	1/2”-3/8” Adapter
Flat Blade Screw Driver (2)	3/8” Deep
Torque Wrench	1-1/8” Deep
Air Impact Wrench	1/4” Allen
Rubber or Neoprene Mallet	3/4” Deep
Breaker Bar	9/16” Deep
Side Cutters/Snips	T-40 Torx Head
Needle Nose Pliers	7/8” Deep
Large External Snap Ring Pliers	
Small Internal Snap Ring Pliers	

TORQUES

REQUIRED TORQUE VALUES			
Item	**Description**	**Torque**	**Operation**
5	Plug 9/16-18 (Metal)	180 – 240 lb-in (20.3 - 27.1 Nm)	Oil Input Port
7	Screw, Hex head 1/4-20 x 1.25”	105 – 155 lb-in (11.8 - 17.5 Nm)	Side Cover Screws
11	Plug, 9/16-18 (Metal)	180 – 240 lb-in (20.3 - 27.1 Nm)	Side Cover, Oil Level Port
23	Filter	130 – 150 lb-in (14.7 - 16.9 Nm)	Oil Filter
24	Check Plug or Shock Valve	280 – 400 lb-in (31.6 - 45.2 Nm)	Center Section
25	Check Plug or Shock Valve	280 – 400 lb-in (31.6 - 45.2 Nm)	Center Section
27	Screw, Hex Head 3/8-16 x1.5	525 – 700 lb-in (59.3 - 79.1 Nm)	Center Section Screws
42	Stud, Short 5/16-24	50 – 120 lb-in (5.6 - 13.5 Nm)	Control Arm
46	Torx Head Screw 5/16-24 x 1.00	230 – 310 lb-in (25.9 - 35.0 Nm)	RTN/FR Control Arm
47	Nut, Hex Lock 5/16-24 UNF	85 – 120 lb-in (9.6 - 13.5 Nm)	Control Arm, Short Stud
99	Nut, Hex Lock 3/4-16	180 – 200 lb-ft (244 - 271 Nm)	Hub Nut
105	Screw, Hex Head 1/4-20 x .75	65 – 95 lb-in (7.3 - 10.7 Nm)	Filter Guard Screws
111	Fitting, STR 9/16-18 SAE	180 – 240 lb-in (20.3 - 27.1 Nm)	Breather Fitting
122	Nut, Hex Locking 1/2-20 Nylon	360 – 520 lb-in (40.6 - 58.7 Nm)	Fan to Input Shaft Nut
123	Screw, Hex Head	50 – 80 lb-in (5.6 - 9.0 Nm)	Fan to Pulley Assembly
134	HFHCS 1/4-20 x .75	65 – 95 lb-in (7.3 - 10.7 Nm)	Charge Plate Screws
142	SHCS 5/16-24 x 1 Patch	175 – 200 lb-in (19.7 - 22.6 Nm)	Neutral Arm Screw
142	Stud, 5/16-24 Friction Pack	50 – 65 lb-in (5.6 - 7.3 Nm)	Friction Pack Stud

As a general rule, use the low end of the torque spec on fasteners when reassembling the unit.

TRANSAXLE REMOVAL

NOTE: *It is necessary to remove the ZT-2800® from the vehicle before performing the repair procedures presented in this section. To remove the wheel from the hub, do so by removing the lug nuts.* ***Do not remove the axle/hub nut unless replacing the hub, the axle seal or removing the axle shaft.***

Before starting any disassembly, make certain that your work area is neat and clean. Clean the external parts of the transaxle.

The following procedures are presented in the order recommended for a complete tear down of the transaxle.

Do not disassemble the unit any farther than necessary to accomplish the required repairs.

Reassembly is accomplished by performing the "Assembly" portions of the procedures. If the unit has been completely disassembled, a summary of the assembly procedures, in the order in which they should occur, is given on page 37.

FAN AND PULLEY

Refer to Figure 15

Disassembly

FAN AND PULLEY KIT (207) CONFIGURATION "A"

1. Remove the locknut (122), slotted washer (123), fan (120) and the pulley (121) from the input shaft.

Inspection

1. Check all components for excessive wear or damage. Replace if necessary.
2. Inspect input shaft splines for wear or damage.

Assembly

1. Reassemble all parts in the reverse order of disassembly.
2. When tightening the fasteners, refer to the table on page 21 for the required torque values.

NOTE: *As a general rule, use the low end of the torque specification on fasteners when reassembling the unit.*

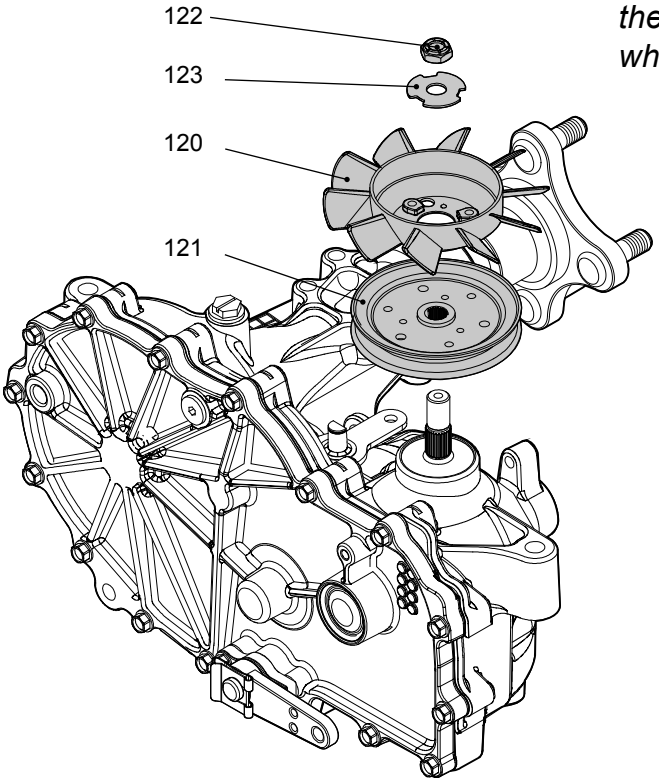

Figure 15, Fan/Pulley Kit (207) Configuration "A"

FAN AND PULLEY (Continued)

Refer to Figure 16

FAN AND PULLEY KIT (207) CONFIGURATION "B"

1. Remove the locknut (122), and detach the fan and pulley assembly from the input shaft.
2. Separate the assembly by removing the screws (123), fan (120) and the pulley (121).

Inspection

1. Check all components for excessive wear or damage. Replace if necessary.

Assembly

1. Reassemble all parts in the reverse order of disassembly.
2. When tightening the fasteners, refer to the table on page 21 for the required torque values.

NOTE: *As a general rule, use the low end of the torque specification on fasteners when reassembling the unit.*

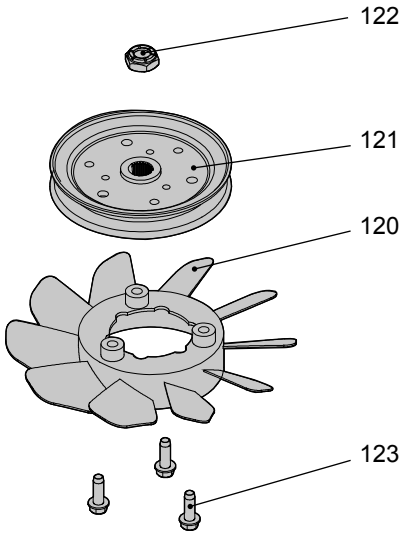

Figure 16, Fan/Pulley Kit (207) Configuration "B"

Refer to Figure 17

FAN AND PULLEY KIT (207) CONFIGURATION "C"

1. Remove the locknut (122) and detach the fan and pulley assembly from the input shaft.
2. Remove the hex head screws (123) to separate the fan (120) and pulley (121) assembly.

Inspection

1. Check all components for excessive wear or damage. Replace if necessary.

Assembly

1. Reassemble all parts in the reverse order of disassembly.
2. When tightening the fasteners, refer to the table on page 21 for the required torque values.

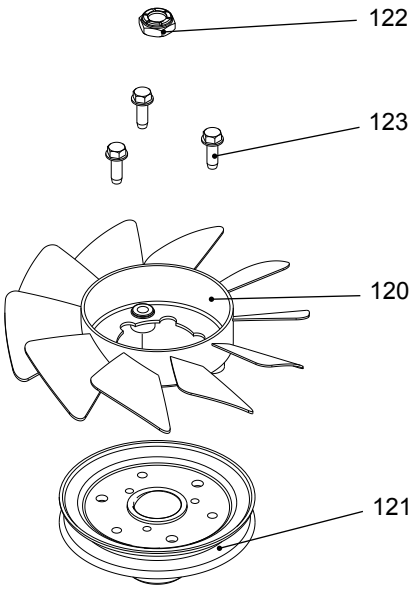

Figure 17, Fan/Pulley Kit (207) Configuration "C"

FAN AND PULLEY (Continued)

Refer to Figure 18

Disassembly

FAN AND PULLEY KIT (207) CONFIGURATION "D"

1. Remove the locknut (122), slotted washer (123), pulley (121), fan (120) and pulley disc (121) the from the input shaft.

Inspection

1. Check all components for excessive wear or damage. Replace if necessary.
2. Inspect input shaft splines for wear or damage.

Assembly

1. Reassemble all parts in the reverse order of disassembly.
2. When tightening the fasteners, refer to the table on page 21 for the required torque values.

NOTE: *As a general rule, use the low end of the torque specification on fasteners when reassembling the unit.*

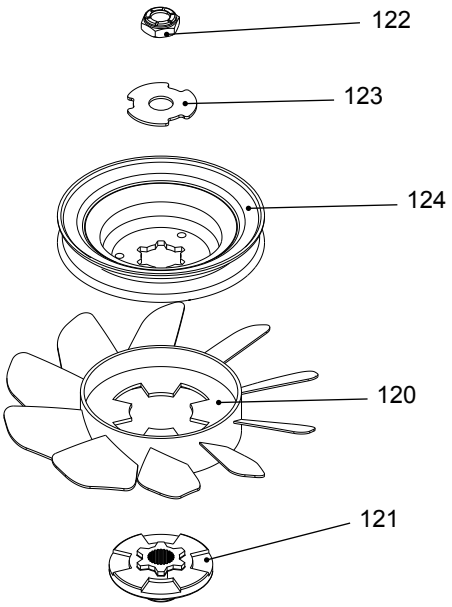

Figure 18, Fan/Pulley Kit (207) Configuration "D"

SIDE COVER

Refer to Figure 19

Disassembly

1. Remove all external items previously discussed in their recommended order.
2. Remove filter (23) and discard. Drain oil from transaxle. Refer to page 11.
3. Remove the screws (7), separate side cover (2) from main housing (1), using “pry points” as required.
4. Remove the bearing (93) from side cover (2).
5. Remove the spacer (92) from axle (94).
6. Clean off all the old sealant from the cover (2) and the main housing (1). Take care not to damage the sealing surfaces. A wire brush and solvent is effective.

IMPORTANT: *Before scraping the old sealant from the main housing, place a protective cover over the internal parts of the transaxle; avoiding any debris from entering the housing.*

Inspection

1. Inspect the bearing and bushing areas in the side cover for excessive wear or damage. Replace if necessary.

Assembly

1. Apply a bead of sealant around the perimeter of the main housing face. See “Sealant Application Diagram” on page 37.
2. Install the locating pins, if not already installed.
3. Install the side housing (2). Use care not to smear the sealant bead.
4. Install the side housing screws (7). Refer to the screw tightening pattern on page 38.
5. When tightening the fasteners, refer to the table on page 21 for the required torque values.

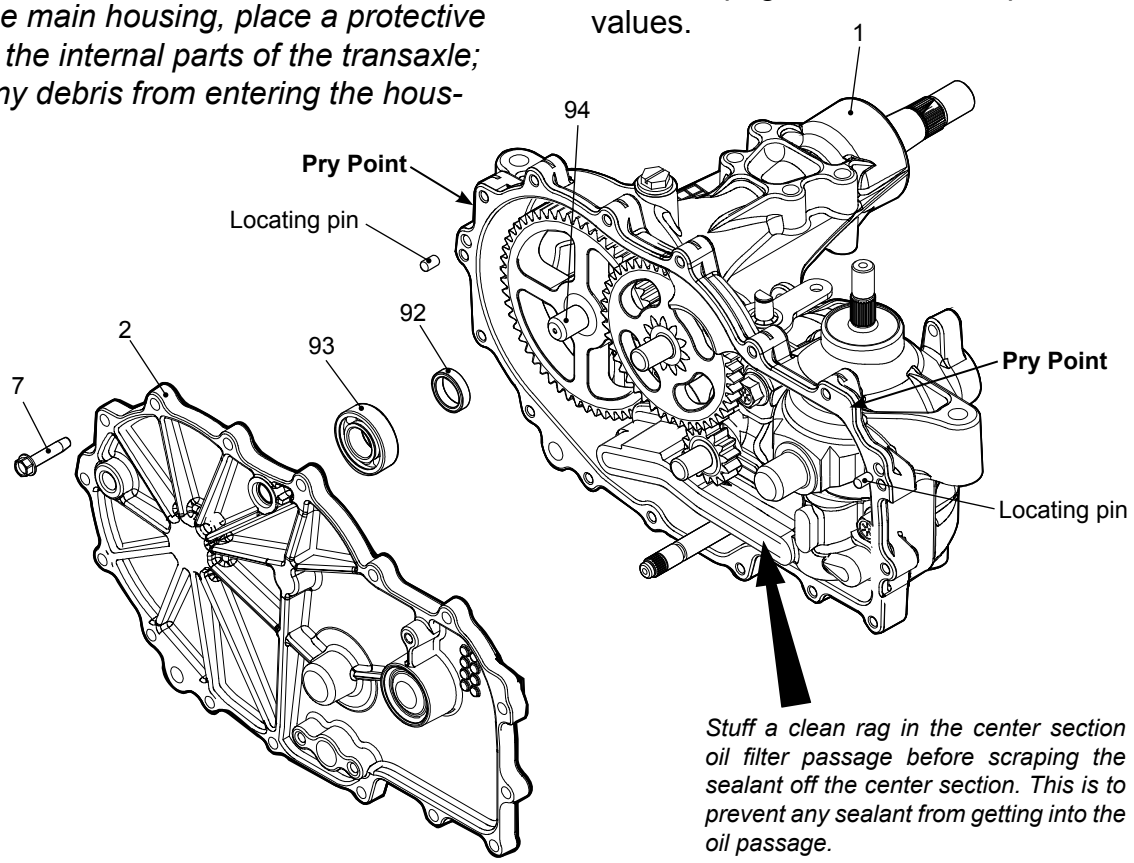

Figure 19, Side Cover

BULL, PINION AND REDUCTION GEARS

Refer to Figure 20

Disassembly

1. Remove external items beginning on page 22.
2. Remove washer (80) and reduction gear set (81-82) as an assembly and set aside. Remove second washer (80) and jack shaft pin (83).
3. Remove the washer (70), retaining ring (71), pinion gear (72) and washer (74) from the motor shaft (73).
4. Remove the bull gear (91).

Inspection

1. Inspect the bull gear (91) – teeth and internal splines, for wear or damage.
2. Separate the reduction gears and inspect the gears and jack shaft pin for excessive wear or damage. Replace if necessary.

Assembly

1. Install the washer (74), pinion gear (72), and secure their placement with retaining ring (71) onto the motor shaft (73).
2. Install the washer (70) onto the motor shaft (73).
3. Install the bull gear (91) onto the axle (94).
4. Install the jack shaft pin (83), washer (80), reduction gears (82) and (81).
5. Install washer (80) to jack shaft pin (83).

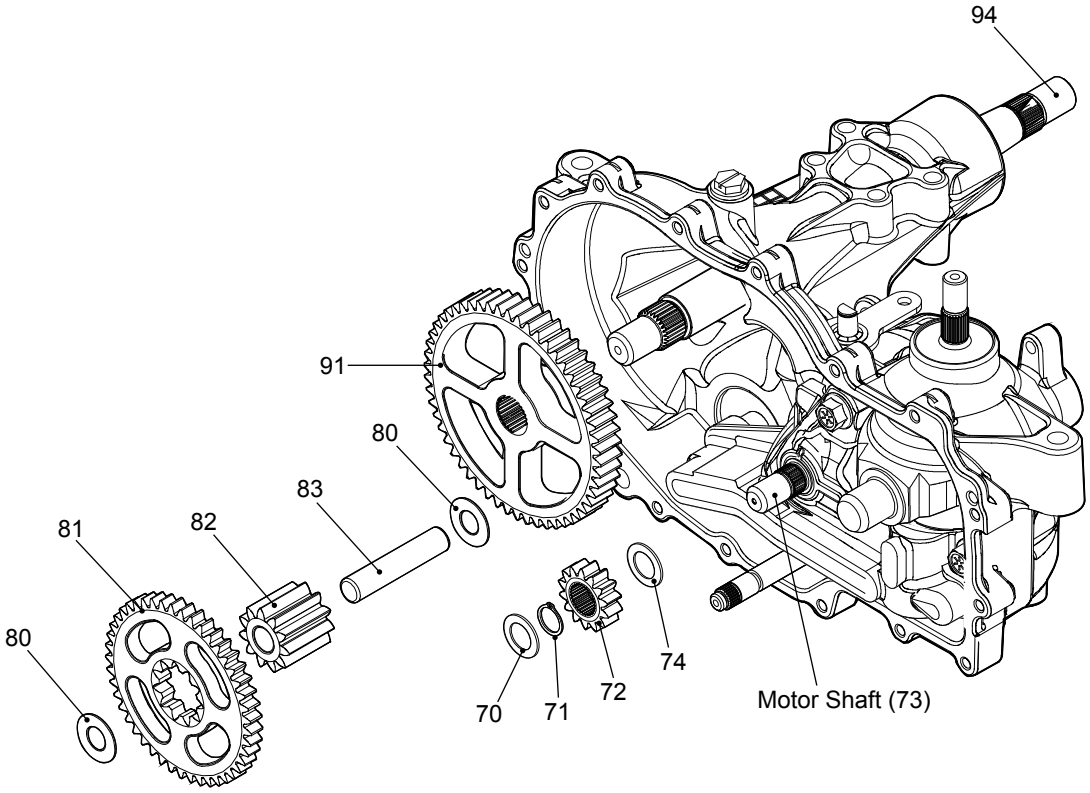

Figure 20, Bull, Reduction and Pinion Gear

CHARGE PUMP

Refer to Figures 21-21a

Disassembly

1. Mark the orientation of the charge pump cover relative to the main housing, prior to removal. Refer to figure 21.

2. Remove the hex head screws (134), charge pump cover, gerotor assembly, and the O-ring (132). Remove the connecting tubes (130) at this point – *only if the center section will be removed*. A pick type tool can be used to remove the connection tubes.

Inspection

1. Inspect the gerotor assembly for wear or damage. Replace if necessary.

Assembly

1. Reassemble all parts in the reverse order of disassembly.

NOTE: *When reinstalling the charge pump components, replace the O-ring (132) Also replace the connecting tubes (130), if they have been removed.*

2. Align the mark on the charge pump cover, from step 1, Disassembly, with the mark on the main housing.

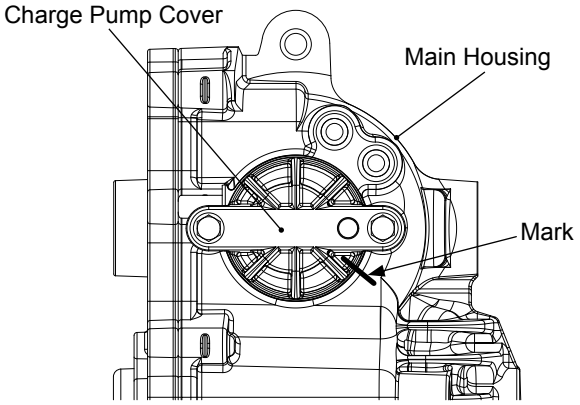

Figure 21, Charge Pump Cover Orientation

3. When tightening the fasteners, refer to the table on page 21 for the required torque values.

NOTE: *As a general rule, use the low end of the torque specification on fasteners when reassembling the unit.*

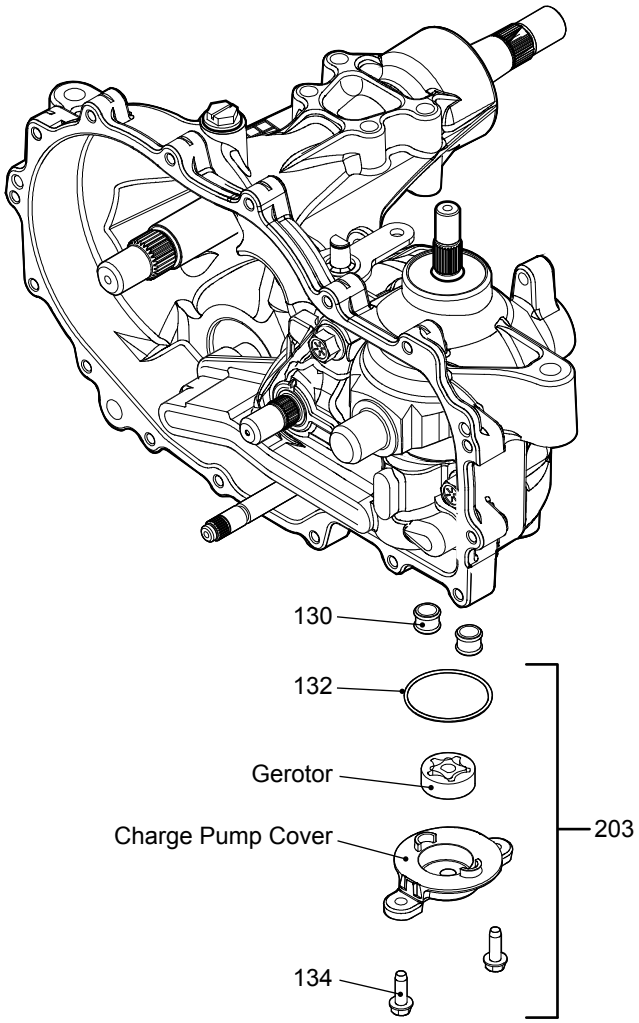

Figure 21a, Charge Pump

INPUT SHAFT

Refer to Figure 22

Disassembly

1. Requires removal of all items beginning on page 22.
2. Remove the retaining ring (57).
3. Remove the lip seal (56) and discard.
4. Remove the washer (55) and the pump shaft assembly (52–53).

NOTE: *To assist in the removal of the pump shaft, lightly tap (using a neoprene head hammer) the shaft from the charge pump side of housing. Care should be taken not to damage the shaft or gerotor running surface.*

Remove the bearing from pump shaft only if worn or damaged.

5. Remove the wire ring retainer (54) and the bearing (53) from the pump shaft (52).

Inspection

1. Inspect the bearing and input shaft for wear or damage. Inspect the splines on the shaft for possible damage. Replace if necessary.

Assembly

1. Reassemble all parts in the reverse order of disassembly.

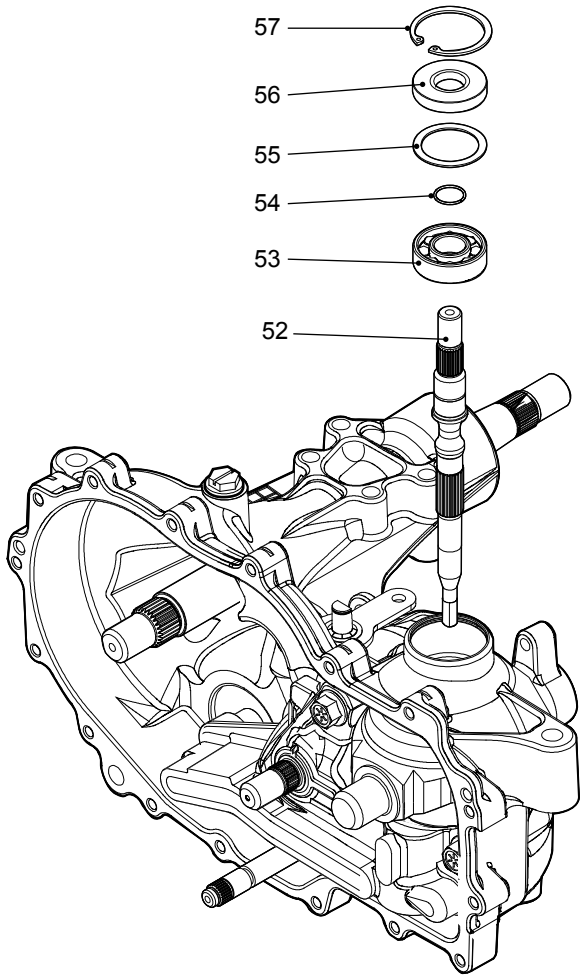

Figure 22, Input Shaft

BYPASS ARM

Refer to Figure 23

Disassembly

1. Requires removal of all items beginning on page 22.
2. Remove the push-on retaining ring (35) and discard. Remove the bypass arm (34).
3. Remove the retaining ring (33).
4. Remove the bypass rod (32) and the clip retaining ring (31) as a single item.

NOTE: *It is not necessary to remove the clip retaining ring (31) from the bypass rod (32) unless it is damaged or worn.*

5. Remove the lip seal (30) and discard.

Inspection

1. Inspect the bypass rod (32) for wear or damage. Replace if necessary.

NOTE: *Take care to insure that the bypass rod is free of burrs that may cut the rubber lip seal.*

Assembly

1. Install a new lip seal (30).
2. Install the clip retaining ring (31) and bypass rod (32).
3. Install the retaining ring (33).
4. Install the bypass arm (34) and new push-on retaining ring (35).

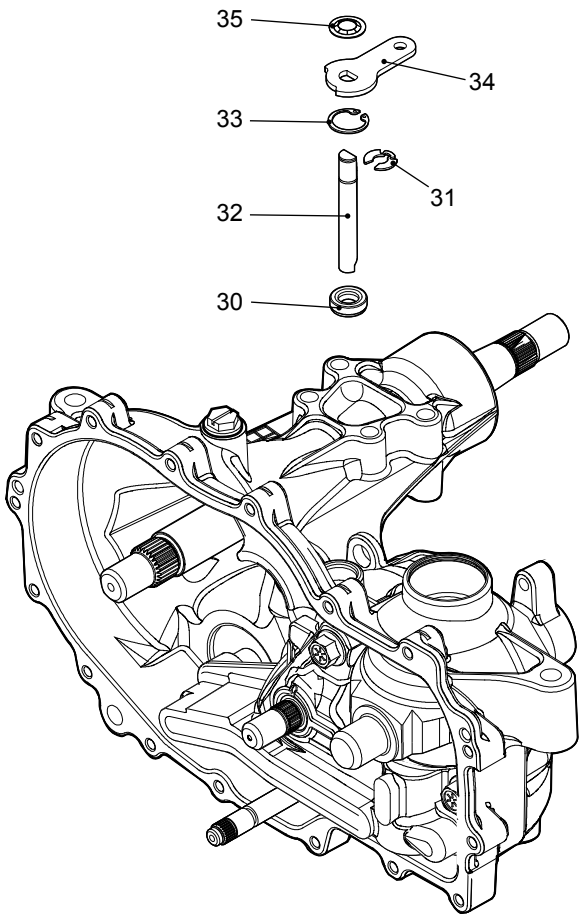

Figure 23, Bypass Arm

SWASHPLATE

Refer to Figures 24-25

Disassembly

1. Requires removal of all items beginning on page 22.
2. Remove the swashplate (40) and pump cylinder block assembly (69) as a single item.
3. Separate the pump cylinder block assembly (69) and the thrust bearing (65) from the swashplate (40) and set aside.

NOTE: *Removal will be aided by applying a small amount of pressure on the trunnion mounted swashplate towards the center section. While CAREFULLY removing the swashplate and block assembly, keep the block face flush with the center section to minimize damage to the running surface.*

Inspection

1. Inspect the swashplate (40) and thrust bearing assembly (65) for wear or damage. Replace if necessary.
2. Inspect pump block per detail on page 32.

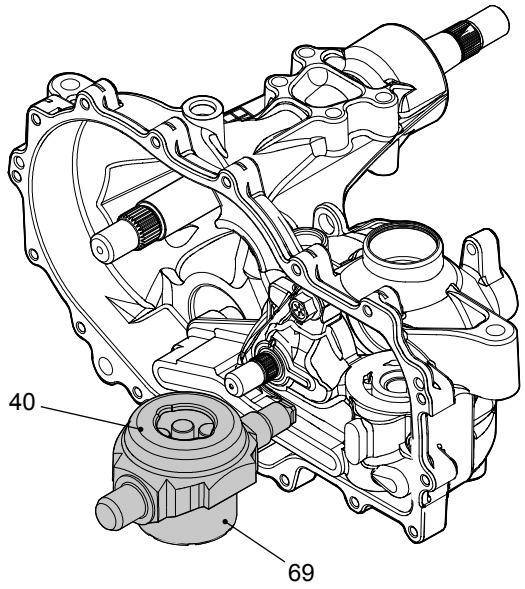

Figure 24, Swash Plate

Assembly

1. Reassemble all parts in the reverse order of disassembly.
2. Apply a light coating of oil to running surfaces on center section, swashplate bearing races, thrust bearing assembly and pump block assembly.
3. Place the thrust bearing assembly (65) into swashplate (40) such that the thick race of the bearing assembly faces out.
4. With the piston facing the thrust bearing, place the pump block assembly (69) into the swashplate.
5. While pressing the pump block assembly (thrust bearing – pump cylinder block) and swashplate together, align to center section in main housing.

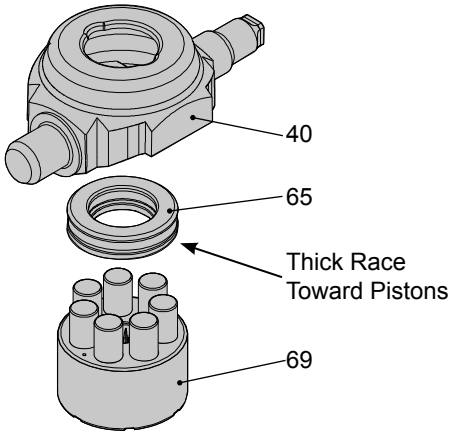

Figure 25, Hydraulic Pump Components

CENTER SECTION

Refer to Figure 26

Disassembly

1. Requires removal of all items beginning on page 22.
2. Remove the center section mounting screws (27).
3. Remove the center section, the motor shaft (73), the motor cylinder block assembly (64) and the brake shaft (101) as a single item.
4. Remove the motor cylinder thrust bearing (60).
5. Remove the motor cylinder block assembly (64) from the motor shaft (73). Remove the motor shaft (73) from the center section.

NOTE: *A bypass puck is located beneath the motor cylinder block assembly. See item 22, page 34.*

6. Remove brake shaft assembly (101) and set aside. Refer to figures 27-28, pages 32-33.

Inspection

1. Inspect the races of the thrust bearing (60) for wear or damage.
2. Inspect the motor shaft for wear or damage. Replace if necessary.
3. Inspect for scratches on the machined surfaces of the center section.
4. Inspect motor cylinder block assembly (64) per detail on page 35.

Assembly

1. Reassemble all parts in the reverse order of disassembly.
2. Apply a light coating of oil to all running surfaces on the center section.
3. Place the thrust bearing assembly (60) into the main housing (1).
4. Place the motor shaft (73) into the center section. Slide the motor block assembly (64) onto the motor shaft (73) so that the pistons are facing the thrust bearing (60).
5. Install the brake shaft assembly (101), if not already installed. Refer to figures 27-28, pages 32-33.
6. Align the assembled components (center section, the motor block and shaft, and the brake shaft assembly) with the main housing and install.
7. Install the center section mounting screws (27) to the proper torque.

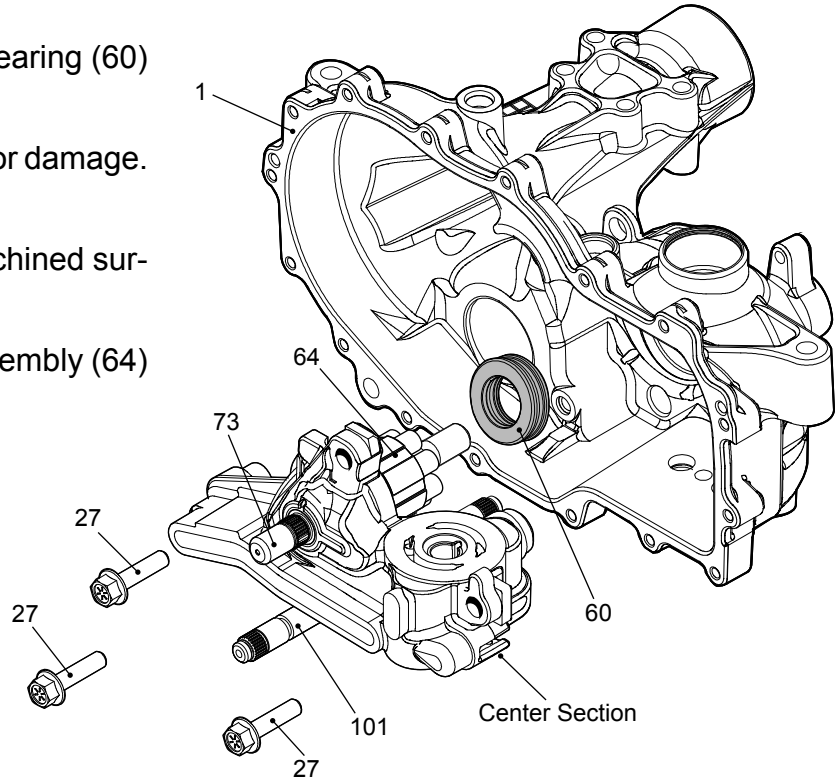

Figure 26, Center Section

BRAKE ASSEMBLY (Code 1 or 2)

Character #7 in the model number code = 1 or 2.

Example: ZX-XXXX-1XXX-XXXX

Refer to Figure 27

Disassembly

1. Remove the center section per detail on page 31.

NOTE: *Take note of the orientation of the brake cam (101) and the brake puck (100).*

2. Remove the brake (cam) shaft (101) and the brake puck (100).
3. Remove the O-rings (10) from the brake (cam) shaft (101) and discard.

Inspection

1. Inspect all components for unusual wear or damage.

Assembly

1. Install the new O-rings (10) onto the brake (cam) shaft (101).

NOTE: *Apply a thin coating of oil to the O-rings before installing.*

To protect the O-rings from possible damage during installation, apply a protective covering over the splines of the brake cam (e.g., cellophane, tape, etc.).

2. Place the brake puck (100) onto the brake (cam) shaft (101). Install the brake cam kit (208) in center section.

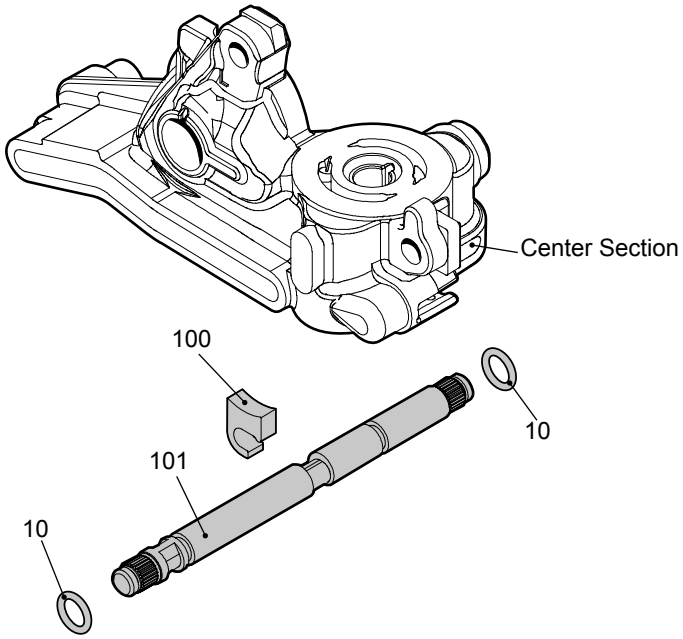

Figure 27, Brake Cam Kit

BRAKE ASSEMBLY (Code 3)

Character #7 in the model number code = 3

Example: ZX-XXXX-3XXX-XXXX

Refer to Figure 28

Disassembly

1. Remove the center section per detail on page 31.

NOTE: *Take note of the orientation of the brake pawl (100) and the brake shaft (101).*

2. Remove the brake shaft (101) and the brake pawl (100).
3. Remove the O-rings (10) from the brake shaft (101) and discard the O-rings.
4. Remove the brake pawl from the brake shaft if pawl, shaft or splines are damaged.

Inspection

1. Inspect all components for unusual wear or damage.

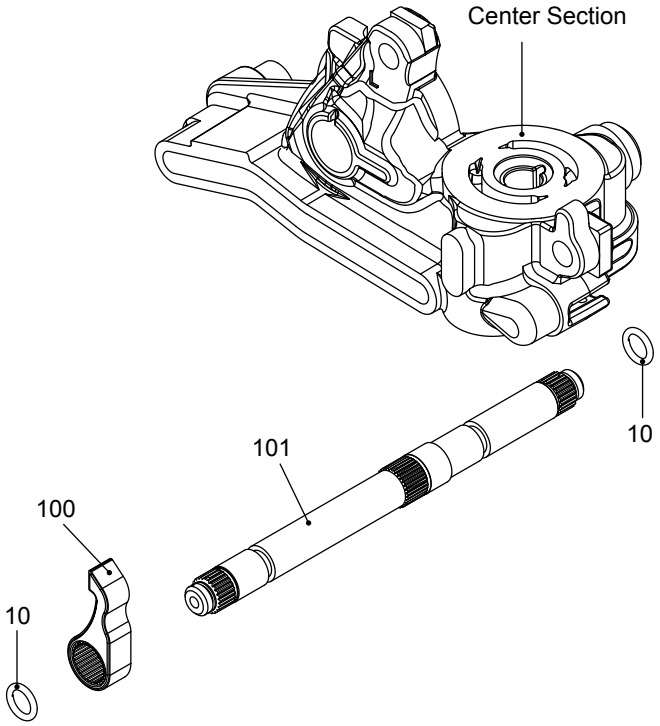

Figure 28, Brake Shaft Assembly

Assembly

1. If removed, install brake pawl on brake shaft. Refer to figure 29 for orientation

NOTE: *Apply a thin coating of oil to the O-rings before installing.*

To protect the O-rings from possible damage during installation, apply a protective covering over the splines of the brake shaft (e.g., cellophane, tape, etc.).

2. Install the new O-rings (10) onto the brake shaft (101).

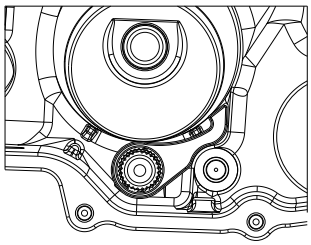

Z * - (G, H, J) * * * - * (A-D, J-M) * * - * * * *

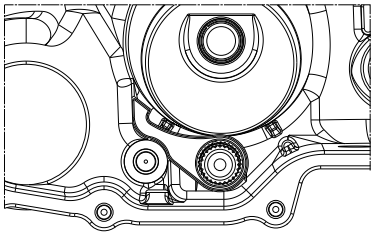

Z * - (K, L, M) * * * * - * (A-D, J-M) * * - * * * *

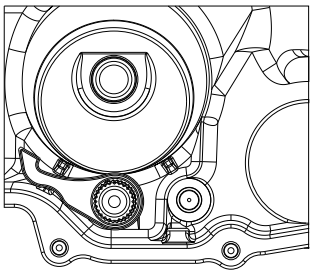

Z * - (G, H, J) * * * - * (E-H, N-T) * * - * * * *

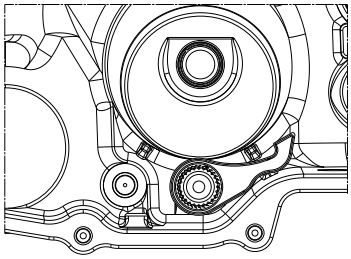

Z * - (K, L, M) * * * - * (E-H, N-T) * * - * * * *

Figure 29, Brake Pawl Orientation

CENTER SECTION KIT

Refer to Figure 30

Disassembly

1. Remove the bypass plate (22) from the center section.
2. Remove the plug seals (26) and discard. Refer to figure 31, on page 35.

IMPORTANT: *Before removing the check plugs, it is important to note their specific location, i.e., check plug (24) needs to be reinstalled in the same port it was removed from and the same for check plug (25). After removing the check plugs, inspect for debris or damage.*

3. Remove the check plugs (24) and (25) and inspect. Refer to Check Plugs & Seals, page 35.

— Charge Relief Kit —

4. Remove the pin, spring and ball that make up the charge relief kit (202). Depressing the charge spring with the (clean) flat side of a slotted screw driver will allow the pin to slide out. Use caution when relieving spring force. Inspect the center section at the charge seat for wear or damage.

NOTE: *The check ball should seat properly in the check seat.*

Inspection

1. Inspect all components for unusual wear or damage. Pay particular attention to the center section's threaded ports and passages; there must be no lose particles or debris.

Assembly

1. Install the charge relief kit (202). Beginning with the ball, then the spring, followed by, the cross pin.
2. Install the new check plugs (24) and (25) in their proper ports.
3. Install the new plug seals (26).
4. Install the bypass plate (22). Applying a very small film of grease on the bypass plate, will help secure it in the center section.

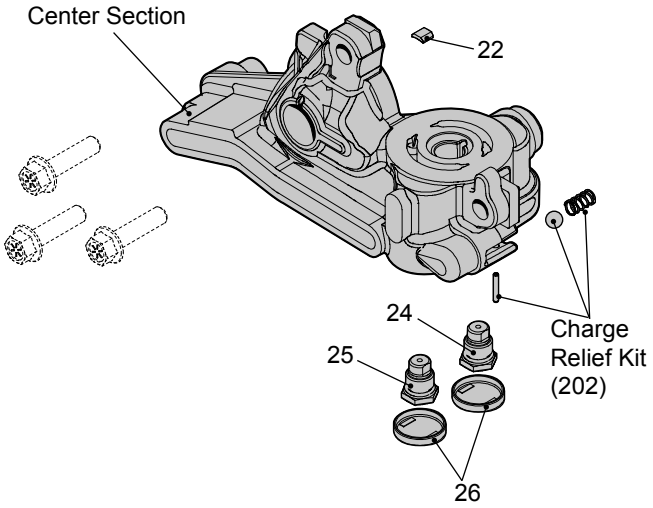

Figure 30, Center Section Kit (201)

NOTE: *For non-charge units without "charge relief," a rubber plug (16) will be present rather than connecting tubes (ref. on page 27, Figure 21a). See diagram to the right.*

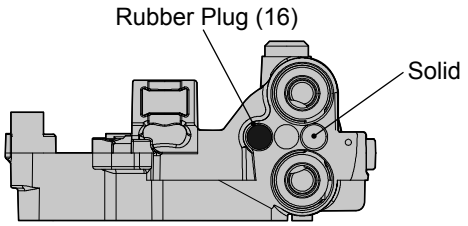

Center Section — Non-Charge

CHECK PLUGS & SEALS

Refer to Figure 31

In order to gain access to the check plugs (24 & 25), it is necessary to remove the plug seals (26). This is accomplished by inserting a seal hook or puller into, and through, one of the insertion points *(rectangular recesses)* on the plug seal, refer to figure 31. After successfully removing the plug seals, discard and replace with new seals.

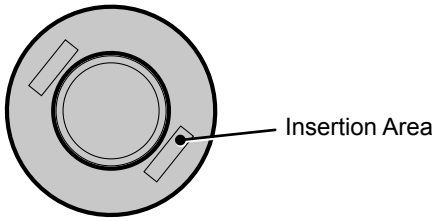

Figure 31, Plug Seal (26)

CYLINDER BLOCKS

Refer to Figure 32

Inspect each component of the cylinder block assemblies for wear or damage. Inspect the cylinder block's running surface for scratches or galling. Replace if necessary.

NOTE: *During separation of the cylinder blocks, take care not to damage the surfaces of the pistons and block.*

Apply a thin coating of oil to all components of the cylinder block assemblies before reassembly.

After reassembling the cylinder block components, set aside until ready for installation of the center section and swashplate. Refer to pages 30 and 31.

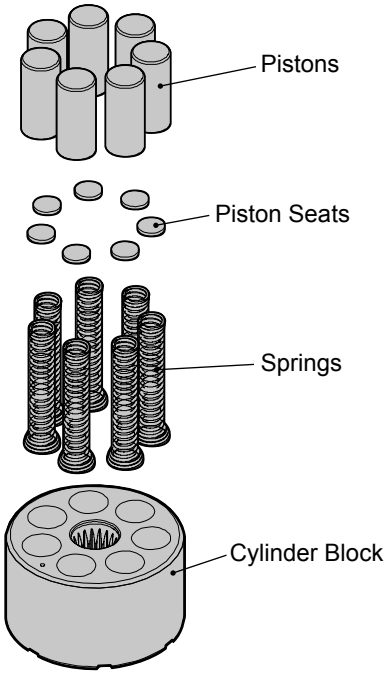

Figure 32, Pump/Motor Cylinder Block Assembly

AXLE SHAFT

Refer to Figure 33

Disassembly

1. Remove all items beginning on page 22.
2. Remove the retaining ring (90).
3. Remove and discard the lip seal (96).
4. Remove the axle shaft (94) in the direction of arrow.
5. Remove the bearing (95).

NOTE: *Remove the bearing from the axle shaft only if worn or damaged.*

Inspection

1. Inspect the splines on the axle shaft for wear or damage. Replace if necessary.
2. Inspect the bearing (95) for wear or damage. Replace if necessary.

Assembly

1. Assemble items in reverse order of disassembly.

NOTE: *To protect the lip seal from possible damage when installing into the bore and over the axle shaft, apply a protective covering over the splines, sharp corners and/or keyway of the axle shaft (e.g., cellophane, tape, etc.).*

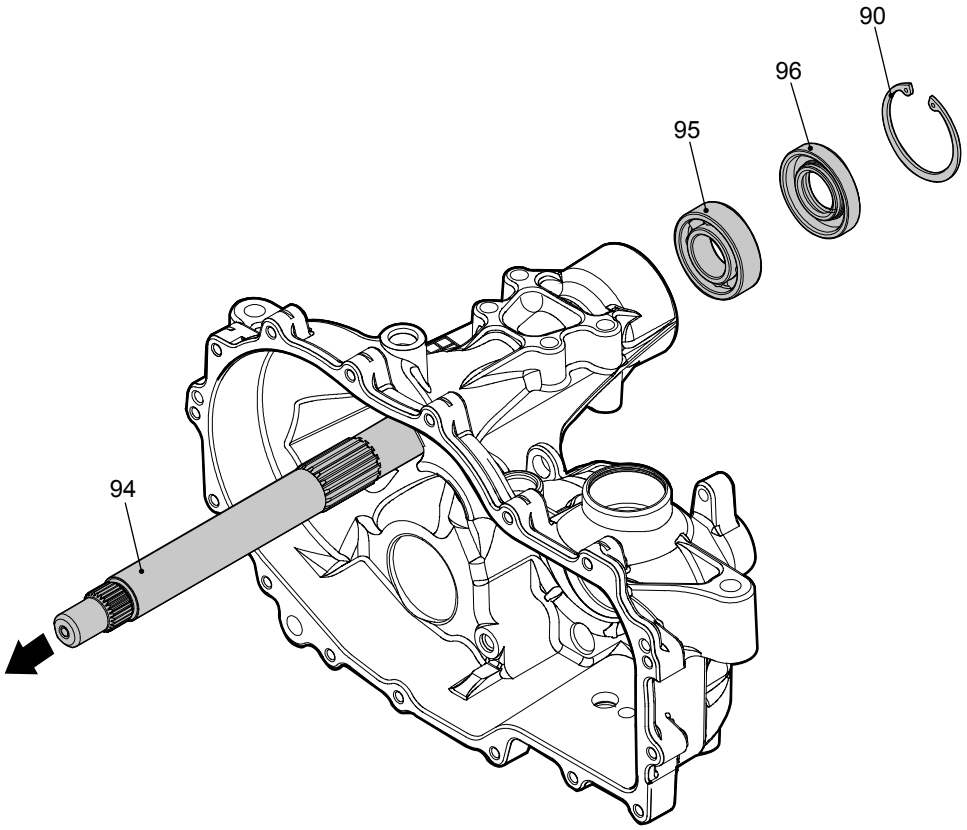

Figure 33, Axle Assembly

ASSEMBLY AFTER A COMPLETE TEAR DOWN

If the unit has been torn down completely, the following summary identifies the assembly procedures necessary to completely assemble the unit. Each assembly procedure is located by a page reference.

The part reference numbers provided in each assembly procedure are keyed to the individual exploded views, and are also keyed to the complete unit exploded view on page 40.

1. Install the axle shaft. See page 36.
2. Install the hydraulic components. See pages 30-35.
3. Install the bypass rod and arm. See page 29.
4. Install the input shaft. See page 28.
5. Install the charge pump. See page 27.
6. Install the reduction gears, pinion gear and bull gear. See page 26.
7. Apply sealant to the main housing and center section prior to installing the side cover. See page 25 and diagram below.

NOTE: *Prior to applying the new sealant, the old sealant must be removed from all surfaces.*

A small consistent bead (approx. 1/16 – 1/8 inch) of the sealant around the housing face will be sufficient. Use sparingly.

The illustration below indicates the correct sealant path.

8. Install the RTN assembly. See page 14.
9. Install the transaxle onto the vehicle.
10. Install new oil filter and fill the transaxle with new oil. See pages 9 and 10.
11. Perform the purge procedures listed on page 12.

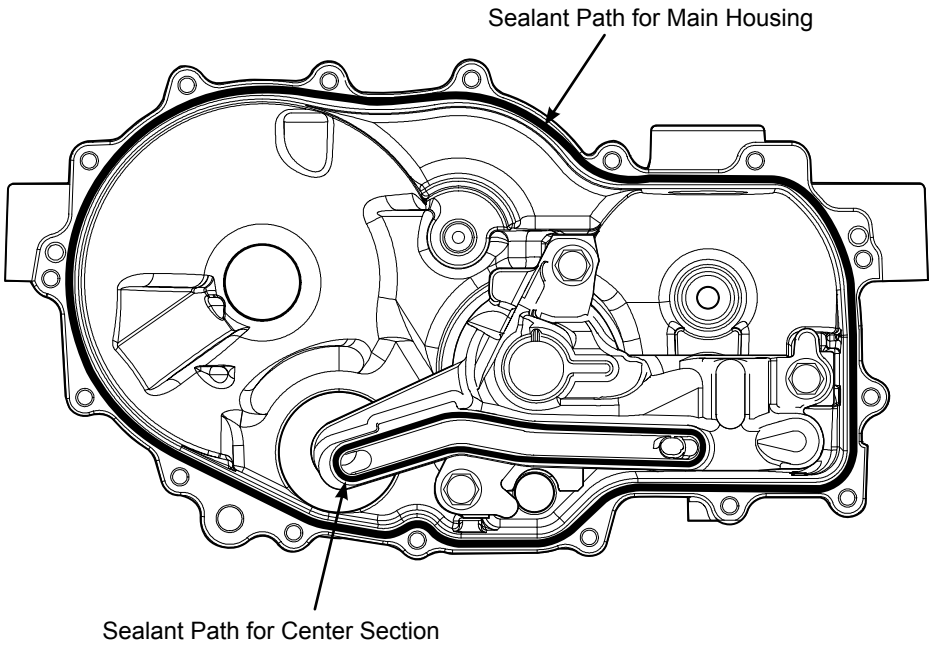

Figure 34, Sealant Application Diagram

SIDE COVER – SCREW TIGHTENING SEQUENCE

Starting with the number “1” screw location, tighten sequentially through to “16.”

Torque each screw to 105 - 155 lb-in (11.87 - 17.52 Nm).

NOTE: *As a general rule, use the low end of the torque specification.*

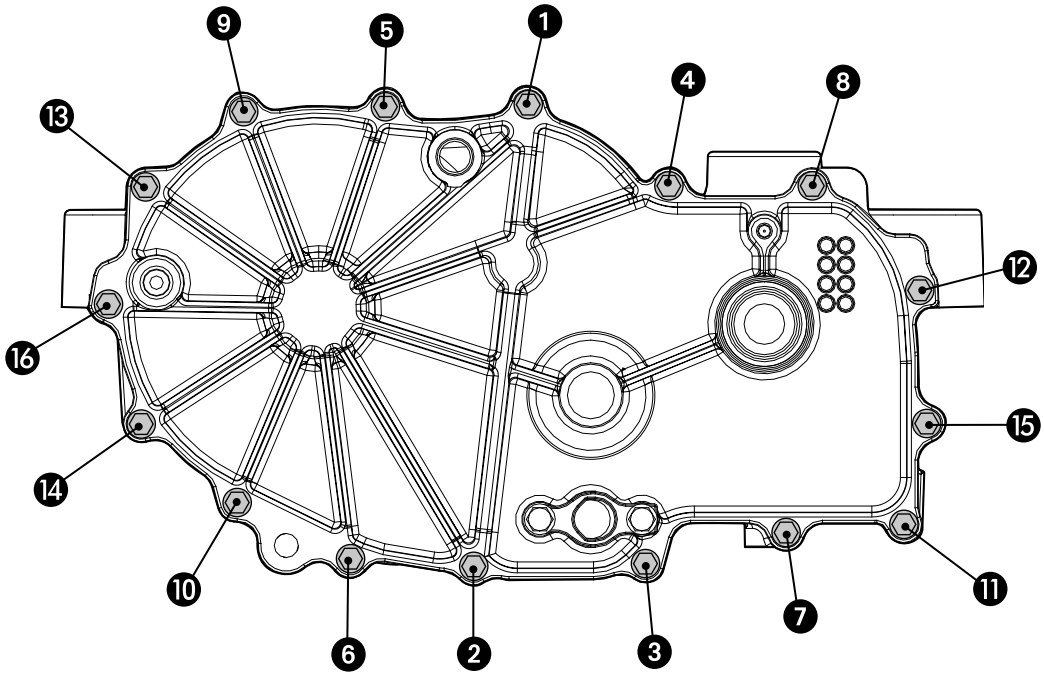

Figure 35, Screw tightening sequence diagram

HOW TO USE THE ZT-2800® SERVICE SCHEMATIC (Online or Schematic CD)

1. Locate the transaxle model number located on the transaxle. Refer to page 6.

2. Become familiar with the model number code by associating model number code characters to component parts/unit attributes. See example below:

Model No.	**Z**	**H**	**-**	**H**	**C**	**E**	**E**	**-**	**3**	**J**	**D**	**B**	**-**	**2**	**B**	**L**	**X**
Character	1	2	-	3	4	5	6	-	7	8	9	10	-	11	12	13	14
Attribute	Series	Reduction Ratio & Pin-ion Material		Axle Side & Charge Pump Rotation	Axle End, Studs & Length	Check Valve Rot. A & Input Axis	Check Valve Rot. B		Brake Arm & Style	Brake Arm Side, Rotation & Pos.	Control Side & Type	Control Arm		Bypass Arm	Fan & Pulley Kit	Breather Fittings	Reserved

3. On page 1 of the ZT-2800 service schematic, locate the part/item number that you want to find the part number for. In this example, we'll use item number 81, Gear.

4. Proceed through the schematic pages until you see an illustration of the part.

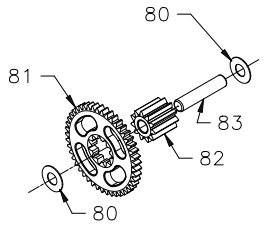

5. Match the item number on the illustrated part to the item number listed in the part/attribute table(s) on the page. Notice that 81 is listed several times in this table.

REDUCTION RATIO

CHAR 2	ITEM	COMPONENT	DESCRIPTION	QTY
H	72	52149	GEAR, 16T	1
	81	**52148**	**GEAR, 43T**	**1**
J	72	52344	GEAR, 16T, STEEL	1
	81	52148	GEAR, 43T	1
K	72	52109	GEAR, 14T	1
	81	52110	GEAR, 45T	1
L	72	52341	GEAR, 14T, STEEL	1
	81	52110	GEAR, 45T	1
M	72	52342	GEAR, 13T, STEEL	1
	81	52343	GEAR, 46T	1

6. To narrow your search in the table, find the character column code that appears as the second character in your model number. In this example it will be "H". Refer to the model number in step 2.

7. Since character number 2 is "H", the part number for item 81 is 52148.

ZT-2800® TRANSAXLE EXPLODED VIEW

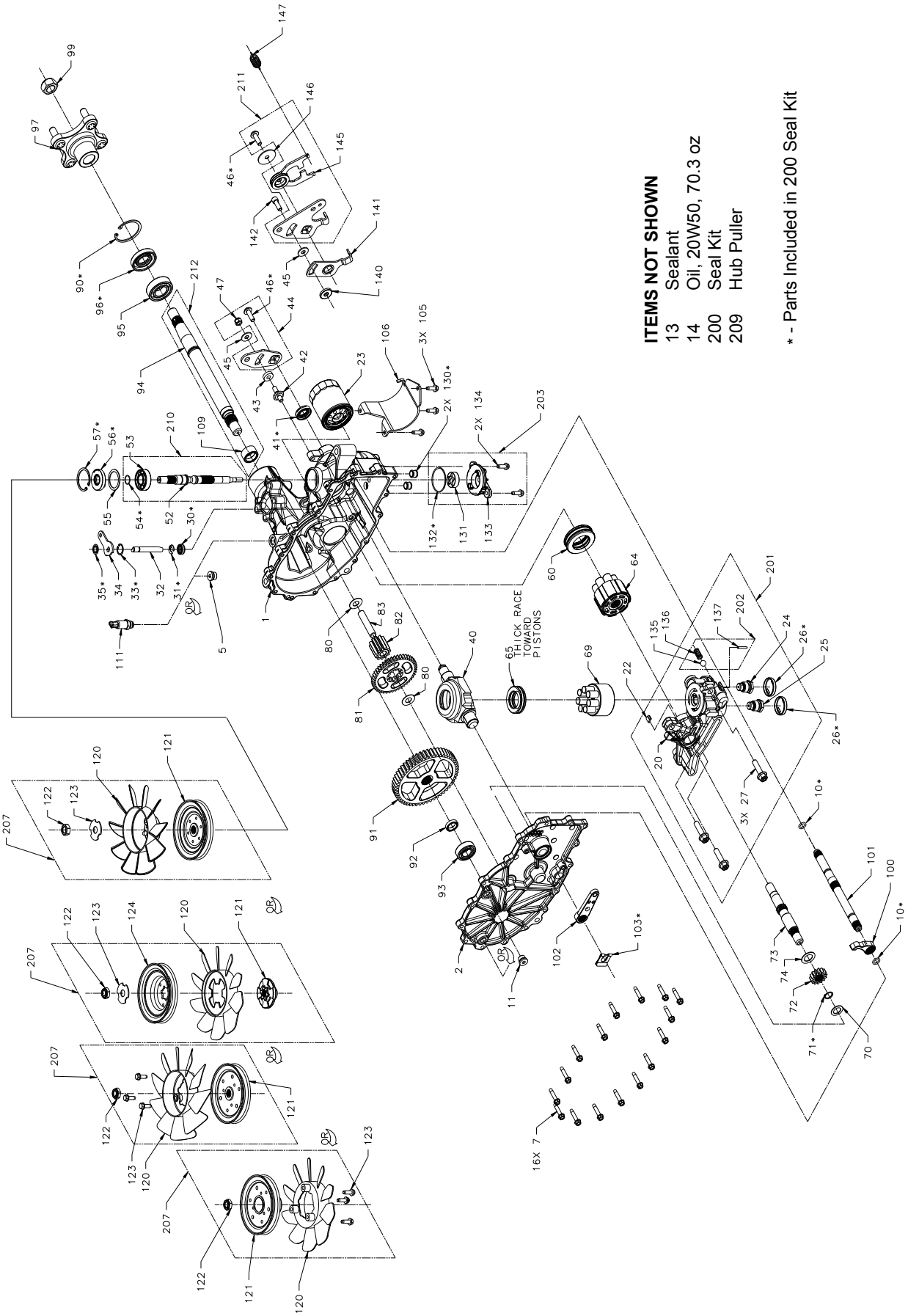

ITEMS NOT SHOWN
13 Sealant
14 Oil, 20W50, 70.3 oz
200 Seal Kit
209 Hub Puller

* - Parts Included in 200 Seal Kit

ZT-2800® TRANSAXLE PARTS LIST

1	Housing, Main
2	Cover, Side
5	Plug 9/16-18 (Metal)
7	Screw, Hex head 1/4-20 x 1.25”
10	O-ring, -111,.103 x .424
11	Plug, 9/16-18 (Metal)
13	Sealant (Loctite 5900)
14	Oil, 20W50
20	Center Section
22	Plate, Bypass
23	Filter, Oil
24	Check Plug/Shock Valve
25	Check Plug/Shock Valve
26	Seal, Plug 1.250 x .250
27	Bolt, Center Section 3/8-16 x 1.5 (patch)
30	Seal, Lip .375 x .75 x .25
31	Ring, Retaining .375 External
32	Rod, Bypass
33	Ring, Retaining .750 Internal
34	Arm, Bypass
35	Ring, Retaining .375 External
40	Trunnion, Swashplate
41	Seal, Lip 18 x 32 x 7
42	Stud, Short 5/16-24
43	Puck, Friction
44	Arm, Control
45	Washer .34 x .88 x .06
46	Screw, Torx 5/16-24 x 1.00 (patch)
47	Nut, Hex Lock 5/16-24 UNF
52	Shaft, Input
53	Bearing, Ball 17x40x12 Open 6203
54	Ring, Retaining Wire .561 I.D.
55	Washer 1.23 x 1.56 x .04
56	Seal, Lip 17 x 40 x 7
57	Ring, Retaining 2.06 Internal
60	Bearing, Thrust
64	Cylinder Block (Motor)
65	Bearing, Thrust Ball 30 x 52 x 13
69	Cylinder Block (Pump)
70	Washer .63 x 1.0 x .05
71	Ring, Retaining 62 External
72	Gear, Pinion (16T, 14T, 13T)
73	Shaft, Motor
74	Washer .72 x 1.16 x .04
80	Washer .5 x 1.0 x .03
81	Gear, Reduction (43T, 45T, 46T)
82	Gear, Reduction 11T
83	Pin, Jack Shaft
90	Ring, Retaining 2.06 Internal
91	Gear, Bull 54T
92	Spacer .750 x 1.000 x .257
93	Bearing, Ball .75 x 40 x 12
94	Shaft, Axle
95	Bearing, Ball 1.0 x 52 x 15 Open 6205M
96	Seal, Lip 25 x 52 x 10 TC (Gray)
97	Hub
99	Nut, Hex Lock 3/4-16
100	Pawl, Brake
101	Shaft, Brake
102	Handle, Brake
103	Clip, Retaining
105	Screw, Hex Flange Head 1/4-20 x .75
106	Guard, Filter
109	Spacer
111	Fitting, STR 9/16-18 SAE .5 BARB
120	Fan 7.0 (10 Blade)
121	Pulley
121	Disc, Pulley
122	Nut, Hex Locking 1/2-20 Nylon
123	Washer, OD Slotted .53 x 1.63 x .0
123	HFHCS 1/4-20 x .75
123	HHCS 1/4-20 x .875
124	Pulley
130	Tube, Connecting
131	Gerotor Assembly
132	O-ring, -137, 0.103 x 2.050
133	Cover, Charge Pump
134	Screw, Hex Flange Head 1/4-20 x .75
135	Ball
136	Spring, Relief
137	Pin, Spring
140	Spacer .320 x 1.005 x .179
141	Arm, Neutral
142	SHCS 5/16-24 x 1 Patch
145	Assembly, RTN
146	Washer, .343 x 1.500 x .062
147	Spring, Extension
200	Kit, Seal
201	Kit, Center Section
202	Kit, Charge Relief
203	Kit, Charge
207	Kit, Fan and Pulley
209	Puller, Hub
210	Kit, Input Shaft
211	Kit, RTN Control Arm
212	Kit, Axle Shaft

GLOSSARY OF TERMS

Axial Piston: Type of design for hydraulic motors and pumps in which the pistons are arranged parallel with the spindle (input or output shaft).

Bypass Valve: A valve whose primary function is to open a path for the fluid to bypass the motor or pump. Also referred to occasionally as the freewheel valve or dump valve.

Case Drain Line (Return Line): A line returning fluid from the component housing to the reservoir.

Cavitation: A concentrated gaseous condition within the fluid causing the rapid implosion of a gaseous bubble.

Center Section: A device which acts as the valve body and manifold of the hydrostatic transaxle or transmission.

Charge Pump: A device which supplies replenishing fluid to the fluid power system (closed loop).

Charge Pressure: The pressure at which replenishing fluid is forced into a fluid power system.

Charge Relief Valve: A pressure control valve whose primary function is to limit pressure in the charge circuit.

Check Valve: A valve whose primary function is to restrict flow in one direction.

Closed Loop: A sealed and uninterrupted circulating path for fluid flow from the pump to the motor and back.

Decay Rate: The ratio of pressure decay over time.

Entrained Air: A mechanically generated mixture of air bubbles having a tendency to separate from the liquid phase.

Gerotor: A formed rotor set operating about an eccentric that provides a fixed displacement for pumps or motors.

Hydraulic Motor: A device which converts hydraulic fluid power into mechanical force and motion by transfer of flow under pressure.

Hydraulic Pump: A device which converts mechanical force and motion into hydraulic fluid power by producing flow.

Hydrostatic Pump: See “Hydraulic Pump.”

Hydrostatic Transaxle: A multi component assembly including a gear case and a hydrostatic transmission.

Hydrostatic Transmission: The combination of a hydraulic pump and motor in one housing to form a device for the control and transfer of power.

Inlet Line: A supply line to the pump.

Integrated Zero-Turn Transaxle: The combination of a hydrostatic transmission and gear case in one housing to form a complete transaxle.

Manifold: A conductor which provides multiple connection ports.

Neutral: Typically described as a condition in which fluid flow and system pressure is below that which is required to turn the output shaft of the motor.

Pressure Decay: A falling pressure.

Priming: The filling of the charge circuit and closed loop of the fluid power system during start up, frequently achieved by pressurizing the fluid in the inlet line.

Purging: The act of replacing air with fluid in a fluid power system by forcing fluid into all of the components and allowing the air a path of escape.

Rated Flow: The maximum flow that the power supply system is capable of maintaining at a specific operating pressure.

Scoring: Scratches in the direction of motion of mechanical parts caused by abrasive contaminants.

Swash Plate: A mechanical device used to control the displacement of the pump pistons in a fluid power system.

System Charge Check Valve: A valve controlling the replenishing flow of fluid from a charge circuit to the closed loop in a fluid power system.

System Pressure: The pressure which overcomes the total resistance in a system, including all efficiency losses.

Valve: A device which controls fluid flow direction, pressure, or flow rate.

Variable Displacement Pump: A pump in which the displacement per revolution can be varied.

Volumetric Displacement: The volume for one revolution.

NOTES

NOTES

© 2008 HYDRO-GEAR
Printed in U.S.A.
Rev. P5